February 26, 2021

Report To: Travis Rob, P.Eng., Manager of Operations & Facilities

From: Craig Miller, P.Eng., Environmental & Facilities Superintendent

SUBJECT: **Fort Frances Drinking Water System**
2020 Annual Summary Report (O. Reg. 170/03, Schedule 22)

Ministry of the Environment Inspection Report – 2020/2021

Fort Frances Drinking Water System
2020 Annual Report

As a requirement of Ontario Regulation 170/03 Schedule 22, the Owner of the Drinking Water System (The Town of Fort Frances) shall prepare a report for the preceding calendar year and give to the members of council no later than March 31. The report is to list the requirements of the Act, regulation, system's approval, drinking water works permit, municipal drinking water licence and any orders applicable to the drinking water system that were not met and what duration/measures were taken to correct the failure during this period. The report is also to include a summary of the quantities and flow rates and compare them to the rated capacity and flow rates approved in system's approval, drinking water works permit or municipal drinking water licence.

The attached Schedule 22 Summary Report identifies the above and includes the findings of the MECP Annual Drinking Water Inspection, conducted remotely commencing January 13, 2021 and a one-day onsite inspection on February 10th, 2021. The period of the inspection was from January 16, 2020 to January 8, 2021.

Also included is a copy of the 2020 Annual Report submitted to the MECP on February 25, 2020.

Once approved by Council, a copy of the Summary Report will be sent to the Owners that are connected to and receive drinking water from the Town system. A copy of the report will be posted on the Town's website for public viewing.

Respectfully submitted,

Craig Miller, P.Eng.
Environmental Superintendent

FORT FRANCES
DRINKING WATER SYSTEM

Large Municipal Residential Drinking Water System

(O. Reg. 170/03 - SCHEDULE 22)

ANNUAL SUMMARY REPORT

For the period of

JANUARY 01, 2020 TO DECEMBER 31, 2020

DRINKING WATER SYSTEM #220000978
February 26, 2021

Prepared By: Craig Miller, P.Eng.
Environmental Superintendent

TABLE OF CONTENTS

1.0	Description	Page 3
2.0	General Overview	Page 3
3.0	Legislative Requirements	Pages 4 - 6
4.0	System Approvals	Page 6
5.0	Failure to Meet Requirements (Non-Compliance Issues)	Pages 6 - 7
6.0	Quantity and Flow Data (2020)	Pages 8 – 9

Appendices:

Appendix “A” - Municipal Drinking Water License
Appendix “B” - Drinking Water Works Permit
Appendix “C” - Permit to Take Water
Appendix “D” - Annual Report to MECP
Appendix “E” - Drinking Water System Inspection Program (2020 – 2021 Inspection Report)
Appendix “F” - DWQMS Certificate of Accreditation

List of References

1.0 Description

This is the Summary Report for the Fort Frances Drinking Water System, as required by Schedule 22 of O. Reg. 170/03, as amended, Summary Reports for Municipalities. For the purposes of the regulation, the Fort Frances Drinking Water System is a large municipal residential system.

2.0 General Overview

The reporting period for this report is January 1, 2020 to December 31, 2020.

During the reporting period, the Fort Frances Drinking Water System was operated pursuant to the legislative, system approval, license and permits listed below:

1. Municipal Drinking Water License (MDWL) No. 224-101, Issue Number: 2, issued May 13, 2016;
2. Drinking Water Works Permit (DWWP) No. 224-201, Issue Number 2: issued May 13, 2016;
3. Safe Drinking Water Act, 2002;
   - O. Reg. 170/03 Drinking Water Systems
   - O. Reg. 128/04 Certification of Drinking Water Operators and Water Quality Analysts
   - O. Reg. 169/03 Ontario Drinking Water Quality Standard
   - O. Reg. 188/07 Licensing of Municipal Drinking Water Systems
4. Ontario Water Resources Act;
   - O. Reg. 387/04 Taking of Water and Transfer

   Permit to Take Water No. 3258-AE6PEM, issued September 27, 2016.

The DWWP and MDWL were issued in accordance with Sections 40 and 44, respectively of the Safe Drinking Water Act (SDWA), 2002. The issuance of the DWWP and MDWL replaces the previously required Certificate of Approval.

The Fort Frances Water Treatment Plant is designated a Class 3 Water Treatment Facility and the Water Distribution System as a Class 2 Water Distribution System. They are referenced through the Ministry of the Environment as Drinking Water System Number 220000978.

The summary report is required to provide the following:

1. A list of any instances when the system failed to meet the requirements of the Safe Drinking Water Act, the regulations, the system's approval, MDWL, DWWP and any order;
2. Descriptions of the measures that were taken to correct the failure;
3. A summary of the quantities and flow rates of water supplied during the reporting period;
4. The monthly average and maximum instantaneous flow rates;
5. A comparison of the data summarized above to the rated capacities and flow rates in the system's approval and/or MDWL.

3.0 Legislative Requirements

Safe Drinking Water Act, 2002 (SDWA):

Every owner of a municipal drinking-water system or a regulated non-municipal drinking-water system and, if an operating authority is responsible for the operation of the system, the operating authority for the system shall ensure the following:

1. That all water provided by the system to the point where the system is connected to a user's plumbing system meets the requirements of the prescribed drinking-water quality standards.

2. That, at all times in which it is in service, the drinking-water system

   i. is operated in accordance with the requirements under this Act,
   ii. is maintained in a fit state of repair, and
   iii. satisfies the requirements of the standards prescribed for the system or the class of systems to which the system belongs.

3. That the drinking-water system is operated by persons having the training or expertise for their operating functions that is required by the regulations and the license or approval issued or granted for the system under this Act.

4. That all sampling, testing and monitoring requirements under this Act that relate to the drinking-water system are complied with.

5. That personnel at the drinking-water system are under the supervision of persons having the prescribed qualifications.

6. That the persons who carry out functions in relation to the drinking-water system comply with such reporting requirements as may be prescribed or that are required by the conditions in the license or approval issued or granted for the system under this Act.

Ontario Regulation 170/03:
(Drinking Water Systems)

The Town of Fort Frances Drinking Water System is categorized as a Large Municipal Residential System; serves a major residential development and serves more than 100 private residences. For this system, the regulation requires that:

The owner of a drinking-water system shall ensure that, not later than March 31 of each year, a report is prepared for the preceding calendar year and is given to:

(a) in the case of a drinking-water system owned by a municipality, the members of the municipal council;

(b) in the case of a drinking-water system owned by a municipal service board established under section 195 of the *Municipal Act, 2001*, the members of the municipal service board; or

(c) in the case of a drinking-water system owned by a corporation, the board of directors of the corporation.

The report must:

(a) list the requirements of the Act, the regulations, the system's approval, drinking water works permit, municipal drinking water license and any orders applicable to the system that were not met at any time during the period covered by the report; and

(b) for each requirement referred to in clause (a) that was not met, specify the duration of the failure and the measures that were taken to correct the failure.

The report must also include the following information for the purpose of enabling the owner of the system to assess the capability of the system to meet existing and planned uses of the system:

1. A summary of the quantities and flow rates of the water supplied during the period covered by the report, including monthly average and maximum daily flows.
2. A comparison of the summary referred to in paragraph 1 to the rated capacity and flow rates approved in the system's approval, drinking water works permit or municipal drinking water license or if the system is receiving all of its water from another system under an agreement to the flow rates specified in the written agreement.

If a report is prepared for a system that supplies water to a municipality under the terms of a contract, the owner of the system shall give a copy of the report to the municipality by March 31.

Ontario Regulation 128/04:
(Certification of Drinking Water Operators and Water Quality Analysts)

This Regulation establishes the training and certification requirements that must be satisfied by certified operators and water quality analysts.

Every operator is required to complete the required training hours within the three-year operator certificate renewal period. Operator training consists of the following:

a) Water Treatment Plant (Class 3): 42 hours of Ministry of the Environment's "Director Approved" class room training, plus 78 hours of On-the-job practical training.
b) Water Distribution System (Class 2): 36 hours of Ministry of the Environment's "Director Approved" class room training, plus 69 hours of On-the-job practical training.

During the reporting period January 1, 2020 to December 31, 2020, all the Town's drinking water operators held a valid operator certificate in compliance with O. Reg. 128/04, made under the Safe Drinking Water Act.

Ontario Regulation 169/03:
(Ontario Drinking Water Quality Standards - ODWQS)

This Ontario Drinking Water Standard (ODWQS) identifies the minimum level of drinking water acceptable for human consumption.

The Town of Fort Frances assesses the acceptability of water through compliance with the following standards:

- Schedule 1. Microbiological Standards
- Schedule 2. Chemical Standards
- Schedule 3. Radiological Standards

As this Regulation indicates the minimum standard, exceedance of these values represents the point of which adverse reporting comes into effect.

Ontario Regulation 188/07:
(Licensing of Municipal Drinking Water Systems)

The Safe Drinking Water Act, 2002 requires Owners and Operating Authorities of municipal residential drinking water systems to have an accredited Operating Authority. In order to become accredited, an Operating Authority must establish and maintain a Quality Management System (QMS). Minimum requirements for the QMS are specified within the Drinking Water Quality Management Standard (DWQMS). Ontario Regulation 188/07 of the SDWA has been established to aid licensing of municipal drinking water systems.

Ontario Water Resources Act, R.S.O. 1990, c. O.40:

Ontario Regulation 387/04:
(Water Taking and Transfer)

The Ontario Water Resources Act requires Owners and Operating Authorities of municipal residential drinking water systems to obtain a Permit to Take Water. The Permit Holder, The Corporation of the Town of Fort Frances, shall comply with the terms and conditions specified within the permit. On September 27, 2016 the Ministry of the Environment and Climate Change issued the Town a new permit, Permit No. 3528-AE6PEM. This permit will expire on September 27, 2026.

4.0 System Approvals – (Current)

The following outlines the current water system Approvals during the 2020 reporting period:

- Municipal Drinking Water License (No. 224-101), Issue Number: 2: Issued May 13, 2016.
- Drinking Water Works Permit (No. 224-201), Issue Number: 2: Issued May 13, 2016.
- Permit to Take Water: Permit Number 3528-AE6PEM: Issued September 27, 2016.

5.0 Failure to Meet Requirements (Non-compliance Issues)

The following is a list of instances when the system failed to meet the requirements of the Act, legislative, the system's approval, MDWL, DWWP or any order that has been issued.

Non-Compliance with Ontario Regulation:

Ontario Regulation 170/03:

There were four incidents of non-compliance with the Terms and Conditions of Ontario Regulation 170/03 during this reporting period:

1) Between March 4, 2020 at 20:12 through March 5, 2020 at 07:50, final effluent chlorine residual data and filter effluent turbidity data was not recorded in the SCADA system due to a UPS failure. This has been resolved with new, redundant UPS systems.
2) Written notice of an adverse water quality incident was not provided to the Ministry within 24 hours of verbal notification. This has been resolved with training.
3) Reporting requirements of lead sampling program was not satisfied. Owners of sample points were not notified by the Town of their test results within 7 days of receiving the results back. This has been resolved and all owners have been notified.
4) The Annual Report submitted to the MECP for 2019 did not include the one adverse test result or corrective action. The 2019 report has since been revised and resubmitted to the MECP, thereby resolving this incident.

Ontario Regulation 128/04:
(Certification of Drinking Water Operators and Water Quality Analysts)

There were no incidents of non-compliance with the Terms and Conditions of Ontario Regulation 128/04 during this reporting period.

Ontario Regulation 169/03:
(Ontario Drinking Water Standards - ODWQS)

There were five incidents of non-compliance with the Terms and Conditions of Ontario Regulation 169/03 during this reporting period.

The drinking water system had five (5) adverse water quality incidents for Total Coliforms.

- 6/15/2020 AWQI #150279 Campground Opening
- 7/21/2020 AWQI #150860 Scott Street Water Main Commissioning
- 9/9/2020 AWQI #151997 Colonization Road Cut and Cap
- 9/14/2020 AWQI #152058 Colonization Road Cut and Cup
- 12/7/2020 AWQI #153207 Weekly Distribution Sample

All reporting and corrective actions were met, as specified by the MECP and Health Unit.

Ontario Regulation 188/07:
(Licensing of Municipal Drinking Water Systems)

There were no incidents of non-compliance with the Terms and Conditions of Ontario Regulation 188/07 during this reporting period.

Non-Compliance with the Municipal Drinking Water License (MDWL) No. 224-101 and Municipal Water Works Permit (MWWP) No. 224-201:

There were no incidents of non-compliance with the Terms and Conditions of the MWWP during this period.

Non-Compliance with the Permit to Take Water No. 3528-AE6PEM:

There were no incidences of non-compliance with the Terms and Conditions of the Permit to Take Water during this reporting period.

Provincial Orders:

No Orders have been issued by the Ministry of the Environment with respect to municipal drinking water system during this reporting period.

Further to the Inspection Report, the Ministry has established an inspection compliances risk framework based on the principles on the Inspection, Investigation & Enforcement Secretariat and advice in internal/external risk experts. The Inspection Rating for the Town of Fort Frances Drinking Water System was 94.11%.

6.0 Quantity and Flow Data (2020)

The following tables and graphs indicate the quantities and flow rates of water taken and produced during the reporting period, including monthly average flows, maximum daily flows and total monthly volumes.

Table 1 - RAW WATER USAGE - 2020				
Month	**Total Flow 1000 m³ / month**	**Average Daily Flow 1000 m³ / day**	**Maximum Daily Flow 1000 m³ / day**	**Max Daily Design Capacity 1000 m3 / day**
January	155.62	5.02	5.28	17
February	144.91	5.00	5.16	17
March	155.94	5.03	6.00	17
April	154.28	5.14	5.77	17
May	162.35	5.24	5.41	17
June	169.00	5.63	6.06	17
July	177.49	5.73	5.95	17
August	176.79	5.70	6.21	17
September	160.54	5.35	5.85	17
October	159.37	5.14	5.58	17
November	152.03	5.07	5.35	17
December	157.09	5.07	5.37	17
Annual Totals	1925.41 Total 160.45 Average	5.26		

Table 2 - TREATED WATER USAGE - 2020				
Month	**Total Flow 1000 m³ / month**	**Average Daily Flow 1000 m³ / day**	**Maximum Daily Flow 1000 m³ / day**	**Max Daily Design Capacity 1000 m3 / day**
January	108.72	3.51	4.24	17
February	101.90	3.51	3.83	17
March	105.30	3.40	4.49	17
April	96.35	3.21	3.64	17
May	111.69	3.60	4.96	17
June	115.66	3.86	5.38	17
July	139.03	4.48	5.46	17
August	127.75	4.12	5.88	17
September	107.69	3.59	4.19	17
October	102.59	3.31	3.91	17
November	98.68	3.29	3.55	17
December	104.35	3.37	3.79	17
Annual Totals	1319.71 Total 109.98 Average	3.60		

Comparison of Flow Summary to Rated Capacity

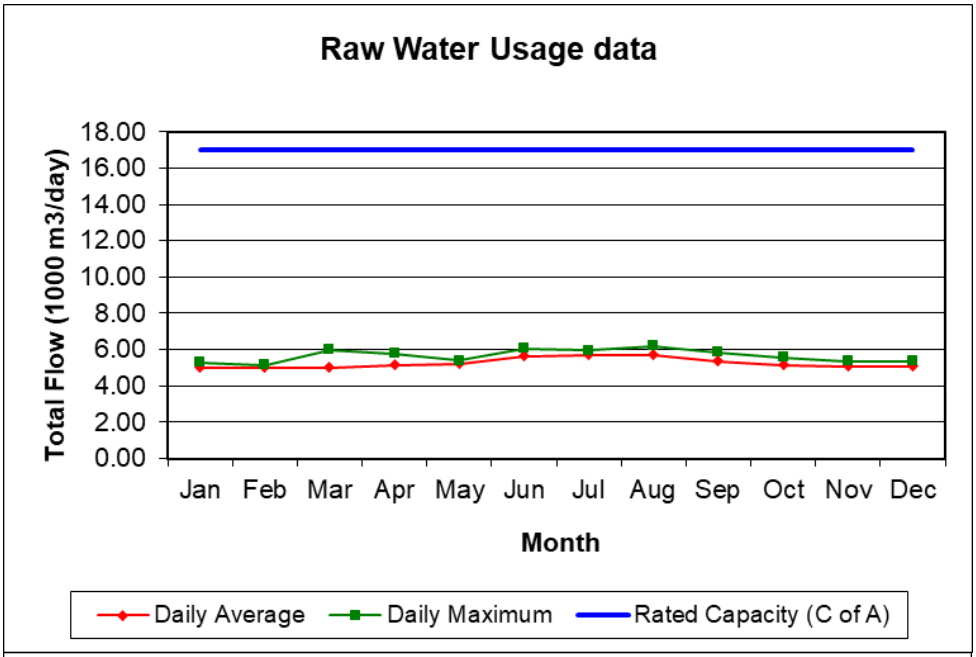

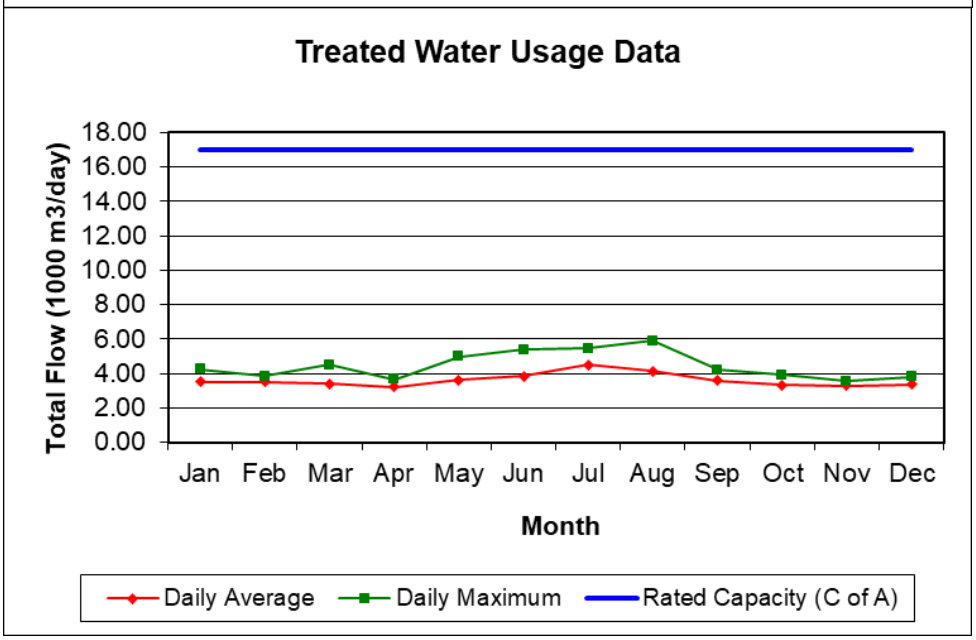

The **Permits to Take Water #3528-AE6PEM** (Issued September 27, 2016) allows the municipality to draw 17,000 m³/day at a maximum flow rate of 12,000 L/min. from its raw water source. As indicated from the charts and tables above, the maximum daily flow of raw water in 2020 was 6,210 m³/day, which is 36.5% of the maximum allowable flow rate.

In accordance with the Municipal Drinking Water License No. 224-201, the Town of Fort Frances Drinking Water System shall not be operated to exceed the rated capacity of 17,000 m³/day on any calendar day, conveyed from the treatment system to the distribution system. The highest single day treated flow in 2020 was 5,880 m³/day, which is 34.6% of the plant's maximum capacity.

There were no instances of treated water flows exceeding the rated capacity as stated in the Municipal Drinking Water Licence during the reporting period of January 1 to December 31, 2020.

Appendix "A"

MUNICIPAL DRINKING WATER LICENCE
License Number: 224-101
Issue Number: 2

MUNICIPAL DRINKING WATER LICENCE

Licence Number: 224-101
Issue Number: 2

Pursuant to the *Safe Drinking Water Act*, 2002, S.O. 2002, c. 32, and the regulations made thereunder and subject to the limitations thereof, this municipal drinking water licence is issued under Part V of the *Safe Drinking Water Act*, 2002, S.O. 2002, c. 32 to:

The Corporation of the Town of Fort Frances

320 Portage Avenue
Fort Frances, ON
P9A 3P9

For the following municipal residential drinking water system:

Fort Frances Drinking Water System

This municipal drinking water licence includes the following:

Schedule	Description
Schedule A	Drinking Water System Information
Schedule B	General Conditions
Schedule C	System-Specific Conditions
Schedule D	Conditions for Relief from Regulatory Requirements
Schedule E	Pathogen Log Removal/Inactivation Credits

DATED at TORONTO this 13th day of May, 2016

Signature

Indra R. Prashad, P.Eng.
Director
Part V, *Safe Drinking Water Act*, 2002

Schedule A: Drinking Water System Information

System Owner	**The Corporation of the Town of Fort Frances**
Licence Number	**224-101**
Drinking Water System Name	**Fort Frances Drinking Water System**
Schedule A Issue Date	**May 13th, 2016**

The following information is applicable to the above drinking water system and forms part of this licence:

Licence

Licence Issue Date	May 13th, 2016
Licence Expiry Date	May 12th, 2021
Application for Licence Renewal Date	November 12th, 2020

Drinking Water Works Permit

Drinking Water System Name	Permit Number	Issue Date
Fort Frances Drinking Water System	224-201	May 13th, 2016

Permits to Take Water

Water Taking Location	Permit Number	Issue Date
Rainy River	7280-6UAMD9	October 05, 2006

Financial Plans

The Financial Plan Number for the Financial Plan required to be developed for this drinking water system in accordance with O. Reg. 453/07 shall be:	224-301
Alternately, if one Financial Plan is developed for all drinking water systems owned by the owner, the Financial Plan Number shall be:	224-301A

Accredited Operating Authority

Drinking Water System or Operational Subsystems	Accredited Operating Authority	Operational Plan No.	Operating Authority No.
Fort Frances Drinking Water System	The Corporation of the Town of Fort Frances	224-401	224-OA1

Schedule B: General Conditions

System Owner	**The Corporation of the Town of Fort Frances**
Licence Number	**224-101**
Drinking Water System Name	**Fort Frances Drinking Water System**
Schedule B Issue Date	**May 13th, 2016**

1.0 Definitions

1.1 Words and phrases not defined in this licence and the associated drinking water works permit shall be given the same meaning as those set out in the SDWA and any regulations made in accordance with that act, unless the context requires otherwise.

1.2 In this licence and the associated drinking water works permit:

"**adverse effect**", "**contaminant**" and "**natural environment**" shall have the same meanings as in the EPA;

"**alteration**" may include the following in respect of this drinking water system:

(a) An addition to the system,
(b) A modification of the system,
(c) A replacement of part of the system, and
(d) An extension of the system;

"**compound of concern**" means a contaminant that, based on generally available information, may be emitted from a component of the drinking water system to the atmosphere in a quantity that is significant either in comparison to the relevant point of impingement limit or if a point of impingement limit is not available for the compound, then based on generally available toxicological information, the compound has the potential to cause an adverse effect as defined by the EPA at a point of impingement;

"**Director**" means a Director appointed pursuant to section 6 of the SDWA for the purposes of Part V of the SDWA;

"**drinking water works permit**" means the drinking water works permit for the drinking water system, as identified in Schedule A of this licence and as amended from time to time;

"emission summary table" means the table that was prepared by a Professional Engineer in accordance with O. Reg. 419/05 and the procedure document listing the appropriate point of impingement concentrations of each compound of concern emitted from a component of the drinking water system and providing comparison to the corresponding point of impingement limit;

"EPA" means the *Environmental Protection Act*, R.S.O. 1990, c. E.19;

"**financial plan**" means the financial plan required by O. Reg. 453/07;

"**licence**" means this municipal drinking water licence for the municipal drinking water system identified in Schedule A of this licence;

"**operational plan**" means an operational plan developed in accordance with the Director's Directions – Minimum Requirements for Operational Plans made under the authority of subsection 15(1) of the SDWA;

"**owner**" means the owner of the drinking water system as identified in Schedule A of this licence;

"**permit to take water**" means the permit to take water that is associated with the taking of water for purposes of the operation of the drinking water system, as identified in Schedule A of this licence and as amended from time to time;

"**point of impingement**" means any point in the natural environment that is not on the same property as the source of the contaminant and as defined by section 2 of O. Reg. 419/05;

"**point of impingement limit**" means the appropriate standard from Schedule 1, 2 or 3 of O. Reg. 419/05 and if a standard is not provided for a compound of concern, the appropriate criteria listed in the Ministry of the Environment and Climate Change publication titled "Summary of Standards and Guidelines to support Ontario Regulation 419: Air Pollution – Local Air Quality (including Schedule 6 of O. Reg. 419 on Upper Risk Thresholds)", dated February 2008, as amended;

"**procedure document**" means the Ministry of the Environment and Climate Change procedure titled "Procedure for Preparing an Emission Summary and Dispersion Modelling Report" dated July 2005, as amended;

"**Professional Engineer**" means a Professional Engineer who has been licenced to practice in the Province of Ontario;

"**provincial officer**" means a provincial officer appointed pursuant to section 8 of the SDWA;

"**publication NPC-300**" means the Ministry of the Environment and Climate Change publication titled "Environmental Noise Guideline: Stationary and Transportation Sources – Approval and Planning" dated August 2013, as amended;

"**SDWA**" means the *Safe Drinking Water* Act, 2002, S.O. 2002, c. 32;

"**sensitive populations**" means any one or a combination of the following locations where the health effects of nitrogen oxides emissions from emergency generators shall be considered using the point of impingement limit instead of the Ministry of the Environment and Climate Change screening level for emergency generators:

(a) health care units (e.g., hospitals and nursing homes),
(b) primary/junior public schools,
(c) day-care facilities, and
(d) playgrounds;

"**subsystem**" has the same meaning as in Ontario Regulation 128/04 (Certification of Drinking Water System Operators and Water Quality Analysts);

"**surface water**" means water bodies (lakes, wetlands, ponds - including dug-outs), water courses (rivers, streams, water-filled drainage ditches), infiltration trenches, and areas of seasonal wetlands;

2.0 Applicability

2.1 In addition to any other requirements, the drinking water system identified above shall be established, altered and operated in accordance with the conditions of the drinking water works permit and this licence.

3.0 Licence Expiry

3.1 This licence expires on the date identified as the licence expiry date in Schedule A of this licence.

4.0 Licence Renewal

4.1 Any application to renew this licence shall be made on or before the date identified as the application for licence renewal date set out in Schedule A of this licence.

5.0 Compliance

5.1 The owner and operating authority shall ensure that any person authorized to carry out work on or to operate any aspect of the drinking water system has been informed of the SDWA, all applicable regulations made in accordance with that act, the drinking water works permit and this licence and shall take all reasonable measures to ensure any such person complies with the same.

6.0 Licence and Drinking Water Works Permit Availability

6.1 At least one copy of this licence and the drinking water works permit shall be stored in such a manner that they are readily viewable by all persons involved in the operation of the drinking water system.

7.0 Permit to Take Water and Drinking Water Works Permit

7.1 A permit to take water identified in Schedule A of this licence is the applicable permit on the date identified as the Schedule A Issue Date.

7.2 A drinking water works permit identified in Schedule A of this licence is the applicable permit on the date identified as the Schedule A Issue Date.

8.0 Financial Plan

8.1 For every financial plan prepared in accordance with subsections 2(1) and 3(1) of O. Reg. 453/07, the owner of the drinking water system shall:

8.1.1 Ensure that the financial plan contains on the front page of the financial plan, the appropriate financial plan number as set out in Schedule A of this licence; and

8.1.2 Submit a copy of the financial plan to the Ministry of Municipal Affairs and Housing within three (3) months of receiving approval by a resolution of municipal council or the governing body of the owner.

9.0 Interpretation

9.1 Where there is a conflict between the provisions of this licence and any other document, the following hierarchy shall be used to determine the provision that takes precedence:

9.1.1 The SDWA*;*

9.1.2 A condition imposed in this licence that explicitly overrides a prescribed regulatory requirement;

9.1.3 A condition imposed in the drinking water works permit that explicitly overrides a prescribed regulatory requirement;

9.1.4 Any regulation made under the SDWA;

9.1.5 Any provision of this licence that does not explicitly override a prescribed regulatory requirement;

9.1.6 Any provision of the drinking water works permit that does not explicitly override a prescribed regulatory requirement;

9.1.7 Any application documents listed in this licence, or the drinking water works permit from the most recent to the earliest; and

9.1.8 All other documents listed in this licence, or the drinking water works permit from the most recent to the earliest.

9.2 If any requirement of this licence or the drinking water works permit is found to be invalid by a court of competent jurisdiction, the remaining requirements of this licence and the drinking water works permit shall continue to apply.

9.3 The issuance of and compliance with the conditions of this licence and the drinking water works permit does not:

9.3.1 Relieve any person of any obligation to comply with any provision of any applicable statute, regulation or other legal requirement, including the *Environmental Assessment Act*, R.S.O. 1990, c. E.18; and

9.3.2 Limit in any way the authority of the appointed Directors and provincial officers of the Ministry of the Environment and Climate Change to require certain steps be taken or to require the owner to furnish any further information related to compliance with the conditions of this licence or the drinking water works permit.

9.4 For greater certainty, nothing in this licence or the drinking water works permit shall be read to provide relief from regulatory requirements in accordance with section 46 of the SDWA, except as expressly provided in the licence or the drinking water works permit.

10.0 Adverse Effects

10.1 Nothing in this licence or the drinking water works permit shall be read as to permit:

10.1.1 The discharge of a contaminant into the natural environment that causes or is likely to cause an adverse effect; or

10.1.2 The discharge of any material of any kind into or in any waters or on any shore or bank thereof or into or in any place that may impair the quality of the water of any waters.

10.2 All reasonable steps shall be taken to minimize and ameliorate any adverse effect on the natural environment or impairment of the quality of water of any waters resulting from the operation of the drinking water system including such accelerated or additional monitoring as may be necessary to determine the nature and extent of the effect or impairment.

10.3 Fulfillment of one or more conditions imposed by this licence or the drinking water works permit does not eliminate the requirement to fulfill any other condition of this licence or the drinking water works permit.

11.0 Change of Owner or Operating Authority

11.1 This licence is not transferable without the prior written consent of the Director.

11.2 The owner shall notify the Director in writing at least 30 days prior to a change of any operating authority identified in Schedule A of this licence.

11.2.1 Where the change of operating authority is the result of an emergency situation, the owner shall notify the Director in writing of the change as soon as practicable.

12.0 Information to be Provided

12.1 Any information requested by a Director or a provincial officer concerning the drinking water system and its operation, including but not limited to any records required to be kept by this licence or the drinking water works permit, shall be provided upon request.

13.0 Records Retention

13.1 Except as otherwise required in this licence or the drinking water works permit, any records required by or created in accordance with this licence or the drinking water works permit, other than the records specifically referenced in section 12 of O. Reg. 170/03, shall be retained for at least 5 years and made available for inspection by a provincial officer, upon request.

14.0 Chemicals and Materials

14.1 All chemicals and materials used in the alteration or operation of the drinking water system that come into contact with water within the system shall meet all applicable standards set by both the American Water Works Association ("AWWA") and the American National Standards Institute ("ANSI") safety criteria standards NSF/60, NSF/61 and NSF/372.

14.1.1 In the event that the standards are updated, the owner may request authorization from the Director to use any on hand chemicals and materials that previously met the applicable standards.

14.1.2 The requirement for the owner to comply with NSF/372 shall come into force no later than July 01, 2018.

14.2 The most current chemical and material product registration documentation from a testing institution accredited by either the Standards Council of Canada or by the American National Standards Institution ("ANSI") shall be available at all times for each chemical and material used in the operation of the drinking water system that comes into contact with water within the system.

14.3 Conditions 14.1 and 14.2 do not apply in the case of the following:

14.3.1 Water pipe and pipe fittings meeting AWWA specifications made from ductile iron, cast iron, PVC, fibre and/or steel wire reinforced cement pipe or high density polyethylene (HDPE);

14.3.2 Articles made from stainless steel, glass, HDPE or Teflon®;

14.3.3 Cement mortar for watermain lining and for water contacting surfaces of concrete structures made from washed aggregates and Portland cement;

14.3.4 Gaskets that are made from NSF approved materials;

14.3.5 Food grade oils and lubricants, food grade anti-freeze, and other food grade chemicals and materials that are compatible for drinking water use; or

14.3.6 Any particular chemical or material where the owner has written documentation signed by the Director that indicates that the Ministry of the Environment and Climate Change is satisfied that the chemical or material is acceptable for use within the drinking water system and the chemical or material is only used as permitted by the documentation.

15.0 Drawings

15.1 All drawings and diagrams in the possession of the owner that show any treatment subsystem as constructed shall be retained by the owner unless the drawings and diagrams are replaced by a revised or updated version showing the subsystem as constructed subsequent to the alteration.

15.2 Any alteration to any treatment subsystem shall be incorporated into process flow diagrams, process and instrumentation diagrams, and record drawings and diagrams within one year of the substantial completion of the alteration.

15.3 Process flow diagrams and process and instrumentation diagrams for any treatment subsystem shall be kept in a place, or made available in such a manner, that they may be readily viewed by all persons responsible for all or part of the operation of the drinking water system.

16.0 Operations and Maintenance Manual

16.1 An up-to-date operations and maintenance manual or manuals shall be maintained and applicable parts of the manual or manuals shall be made available for reference by all persons responsible for all or part of the operation or maintenance of the drinking water system.

16.2 The operations and maintenance manual or manuals, shall include at a minimum:

16.2.1 The requirements of this licence and associated procedures;

16.2.2 The requirements of the drinking water works permit for the drinking water system;

16.2.3 A description of the processes used to achieve primary and secondary disinfection within the drinking water system, including where applicable:

a) A copy of the CT calculations that were used as the basis for primary disinfection under worst case operating conditions; and

b) The validated operating conditions for UV disinfection equipment, including a copy of the validation certificate;

16.2.4 Procedures for monitoring and recording the in-process parameters necessary for the control of any treatment subsystem and for assessing the performance of the drinking water system;

16.2.5 Procedures for the operation and maintenance of monitoring equipment;

16.2.6 Contingency plans and procedures for the provision of adequate equipment and material to deal with emergencies, upset conditions and equipment breakdown;

16.2.7 Procedures for dealing with complaints related to the drinking water system, including the recording of the nature of the complaint and any investigation and corrective action taken in respect of the complaint;

16.3 Procedures necessary for the operation and maintenance of any alterations to the drinking water system shall be incorporated into the operations and maintenance manual or manuals prior to those alterations coming into operation.

16.4 The requirement for the owner to comply with condition 16.2.3 shall come into force on January 01, 2017.

Schedule C: System-Specific Conditions

System Owner	**The Corporation of the Town of Fort Frances**
Licence Number	**224-101**
Drinking Water System Name	**Fort Frances Drinking Water System**
Schedule C Issue Date	**May 13th, 2016**

1.0 System Performance

Rated Capacity

1.1 For each treatment subsystem listed in column 1 of Table 1, the maximum daily volume of treated water that flows from the treatment subsystem to the distribution system shall not exceed the value identified as the rated capacity in column 2 of the same row.

Table 1: Rated Capacity

Column 1 Treatment Subsystem Name	Column 2 Rated Capacity (m^3/day)
Fort Frances Water Treatment Plant	17,000

Maximum Flow Rates

1.2 For each treatment subsystem listed in column 1 of Table 2, the maximum flow rate of water that flows into a treatment subsystem component listed in column 2 shall not exceed the value listed in column 3 of the same row.

Table 2: Maximum Flow Rates

Column 1 Treatment Subsystem Name	Column 2 Treatment Subsystem Component	Column 3 Maximum Flow Rate (L/s)
Not Applicable	Not Applicable	Not Applicable

1.3 Despite conditions 1.1 and 1.2, a treatment subsystem may be operated temporarily at a maximum daily volume and/or a maximum flow rate above the values set out in column 2 of Table 1 and column 3 of Table 2 respectively for the purposes of fighting a large fire or for the maintenance of the drinking water system.

1.4 Condition 1.3 does not authorize the discharge into the distribution system of any water that does not meet all of the requirements of this licence and all other regulatory requirements, including compliance with the Ontario Drinking Water Quality Standards.

Residue Management

1.5 In respect of an effluent discharged into the natural environment from a treatment subsystem or treatment subsystem component listed in column 1 of Table 3:

1.5.1 The annual average concentration of a test parameter identified in column 2 shall not exceed the value in column 3 of the same row; and

1.5.2 The maximum concentration of a test parameter identified in column 2 shall not exceed the value in column 4 of the same row.

Table 3: Residue Management

Column 1 Treatment Subsystem or Treatment Subsystem Component Name	Column 2 Test Parameter	Column 3 Annual Average Concentration (mg/L)	Column 4 Maximum Concentration (mg/L)
Not Applicable	Not Applicable	Not Applicable	Not Applicable

UV Disinfection Equipment Performance

1.6 For each treatment subsystem or treatment subsystem component listed in column 1 of Table 4, and while directing water to the distribution system:

1.6.1 The UV disinfection equipment shall be operated such that a continuous pass-through UV dose is maintained throughout the life time of the UV lamp(s) that is at least the minimum continuous pass-through UV dose set out in column 2 of the same row at the maximum design flow rate for the equipment;

1.6.2 In addition to any other sampling, analysis and recording that may be required, the ultraviolet light disinfection equipment shall test for the test parameters set out in column 4 of the same row at a testing frequency of once every five (5) minutes or less and record the test data at a recording frequency of once every four (4) hours or less;

1.6.3 If there is a UV disinfection equipment alarm, the test parameters set out in column 4 of the same row shall be recorded at a recording frequency of once every five minutes or less until the alarm condition has been corrected;

1.6.4 A monthly summary report shall be prepared at the end of each calendar month which sets out the time, date and duration of each UV equipment alarm, the volume of water treated during each alarm period and the actions taken by the operating authority to correct the alarm situation;

Table 4: UV Disinfection Equipment			
Column 1 **Treatment Subsystem or Treatment Subsystem Component Name**	**Column 2** **Minimum Continuous Pass-Through UV Dose (mJ/cm^2)**	**Column 3** **Control Strategy**	**Column 4** **Test Parameter**
Not Applicable	Not Applicable	Not Applicable	Not Applicable

2.0 Flow Measurement and Recording Requirements

2.1 For each treatment subsystem identified in column 1 of Table 1 and in addition to any other flow measurement and recording that may be required, continuous flow measurement and recording shall be undertaken for:

2.1.1 The flow rate and daily volume of treated water that flows from the treatment subsystem to the distribution system.

2.1.2 The flow rate and daily volume of water that flows into the treatment subsystem.

2.2 For each treatment subsystem component identified in column 2 of Table 2 and in addition to any other flow measurement and recording that may be required, continuous flow measurement and recording shall be undertaken for the flow rate and daily volume of water that flows into the treatment subsystem component.

2.3 Where a rated capacity from Table 1 or a maximum flow rate from Table 2 is exceeded, the following shall be recorded:

2.3.1 The difference between the measured amount and the applicable rated capacity or maximum flow rate specified in Table 1 or Table 2;

2.3.2 The time and date of the measurement;

2.3.3 The reason for the exceedance; and

2.3.4 The duration of time that lapses between the applicable rated capacity or maximum flow rate first being exceeded and the next measurement where the applicable rated capacity or maximum flow rate is no longer exceeded.

3.0 Calibration of Flow Measuring Devices

3.1 All flow measuring devices that are required by regulation, by a condition in the Drinking Water Works Permit, or by a condition otherwise imposed by the Ministry of the Environment and Climate Change, shall be checked and calibrated in accordance with the manufacturer's instructions.

3.2 If the manufacturer's instructions do not indicate how often to check and calibrate a flow measuring device, the equipment shall be checked and calibrated at least once every 12 months during which the drinking water system is in operation.

3.2.1 For greater certainty, if condition 3.2 applies, the equipment shall be checked and calibrated not more than 30 days after the first anniversary of the day the equipment was checked and calibrated in the previous 12-month period.

4.0 Additional Sampling, Testing and Monitoring

Drinking Water Health and Non-Health Related Parameters

4.1 For each treatment subsystem or treatment subsystem component identified in column 1 of Tables 5 and 6 and in addition to any other sampling, testing and monitoring that may be required, sampling, testing and monitoring shall be undertaken for a test parameter listed in column 2 at the sampling frequency listed in column 3 and at the monitoring location listed in column 4 of the same row.

Table 5: Drinking Water Health Related Parameters

Column 1 Treatment Subsystem or Treatment Subsystem Component Name	Column 2 Test Parameter	Column 3 Sampling Frequency	Column 4 Monitoring Location
Not Applicable	Not Applicable	Not Applicable	Not Applicable

Table 6: Drinking Water Non-Health Related Parameters

Column 1 Treatment Subsystem or Treatment Subsystem Component Name	Column 2 Test Parameter	Column 3 Sampling Frequency	Column 4 Monitoring Location
Not Applicable	Not Applicable	Not Applicable	Not Applicable

Environmental Discharge Parameters

4.2 For each treatment subsystem or treatment subsystem component identified in column 1 of Table 7 and in addition to any other sampling, testing and monitoring that may be required, sampling, testing and monitoring shall be undertaken for a test parameter listed in column 2 using the sample type identified in column 3 at the sampling frequency listed in column 4 and at the monitoring location listed in column 5 of the same row.

4.3 For the purposes of Table 7:

4.3.1 Manual Composite means the mean of at least three grab samples taken during a discharge event, with one sample being taken immediately following the commencement of the discharge event, one sample being taken approximately at the mid-point of the discharge event and one sample being taken immediately before the end of the discharge event; and

4.3.2 Automated Composite means samples must be taken during a discharge event by an automated sampler at a minimum sampling frequency of once per hour.

4.4 Any sampling, testing and monitoring for the test parameter Total Suspended Solids shall be performed in accordance with the requirements set out in the publication "Standard Methods for the Examination of Water and Wastewater", 21st Edition, 2005, or as amended from time to time by more recently published editions.

Table 7: Environmental Discharge Parameters

Column 1 Treatment Subsystem or Treatment Subsystem Component Name	Column 2 Test Parameter	Column 3 Sample Type	Column 4 Sampling Frequency	Column 5 Monitoring Location
Fort Frances Water Treatment Plant	Total Suspended Solids	Composite	Quarterly	Point of discharge to Rainy River

4.5 Pursuant to Condition 10 of Schedule B of this licence, the owner may undertake the following environmental discharges associated with the maintenance and/or repair of the drinking water system:

4.5.1 The discharge of potable water from a watermain to a road or storm sewer;

4.5.2 The discharge of potable water from a water storage facility or pumping station:

4.5.2.1 To a road or storm sewer; or

4.5.2.2 To a watercourse where the discharge has been dechlorinated and if necessary, sediment and erosion control measures have been implemented.

4.5.3 The discharge of dechlorinated non-potable water from a watermain, water storage facility or pumping station to a road or storm sewer;

4.5.4 The discharge of raw water from a groundwater well to the environment where if necessary, sediment and erosion control measures have been implemented; and

4.5.5 The discharge of raw water, potable water or non-potable water from a treatment subsystem to the environment where if necessary, the discharge has been dechlorinated and sediment and erosion control measures have been implemented.

5.0 Studies Required

5.1 Not applicable

6.0 Source Protection

6.1 Not applicable

Schedule D: Conditions for Relief from Regulatory Requirements

System Owner	**The Corporation of the Town of Fort Frances**
Licence Number	**224-101**
Drinking Water System Name	**Fort Frances Drinking Water System**
Schedule D Issue Date	**May 13th, 2016**

1.0 Lead Regulatory Relief

1.1 Any relief from regulatory requirements previously authorized by the Director in respect of the drinking water system under section 38 of the SDWA in relation to the sampling, testing or monitoring requirements contained in Schedule 15.1 of O. Reg. 170/03 shall remain in force until such time as Schedule 15.1 of O. Reg. 170/03 is amended after June 1, 2009.

2.0 Other Regulatory Relief

2.1 Not Applicable.

Schedule E: Pathogen Log Removal/Inactivation Credits

System Owner	**The Corporation of the Town of Fort Frances**
Licence Number	**224-101**
Drinking Water System Name	**Fort Frances Drinking Water System**
Schedule E Issue Date	**May 13th, 2016**

1.0 Primary Disinfection Pathogen Log Removal/Inactivation Credits

Fort Frances Water Treatment Plant

Rainy River [SURFACE WATER]

Minimum Log Removal/ Inactivation Required	Cryptosporidium Oocysts	Giardia Cysts [a]	Viruses [b]
Fort Frances Water Treatment Plant	2	3	4

[a] At least 0.5 log inactivation of Giardia shall be achieved by the disinfection portion of the overall water treatment process.
[b] At least 2 log inactivation of viruses shall be achieved by disinfection.

Log Removal/Inactivation Credits Assigned [c]	Cryptosporidium Oocysts	Giardia Cysts	Viruses
Conventional Filtration	2	2.5	2
Chlorination [CT: Contact chamber, clearwell/reservoir and high lift pump chamber]	-	0.5	2+

[c] Log removal/inactivation credit assignment is based on each treatment process being fully operational and the applicable log removal/inactivation credit assignment criteria being met.

Treatment Component	Log Removal/Inactivation Credit Assignment Criteria
Conventional Filtration	1. A chemical coagulant shall be used at all times when the treatment plant is in operation; 2. Chemical dosages shall be monitored and adjusted in response to variations in raw water quality; 3. Effective backwash procedures shall be maintained including filter-to-waste or an equivalent procedure during filter ripening to ensure that effluent turbidity requirements are met at all times; 4. Filtrate turbidity shall be continuously monitored from each filter; and 5. Performance criterion for filtered water turbidity of less than or equal to 0.3 NTU in 95% of the measurements each month shall be met for each filter.
Chlorination	1. Sampling and testing for free chlorine residual shall be carried out by continuous monitoring equipment in the treatment process at or near a location where the intended contact time has just been completed in accordance with the Ministry's Procedure for Disinfection of Drinking Water in Ontario; and 2. At all times, CT provided shall be greater than or equal to the CT required to achieve the log removal credits assigned.
Primary Disinfection Notes	

Appendix “B”

DRINKING WATER WORKS PERMIT
Permit Number: 224-201
Issue Number: 2

DRINKING WATER WORKS PERMIT

Permit Number: 224-201
Issue Number: 2

Pursuant to the *Safe Drinking Water Act*, 2002, S.O. 2002, c. 32, and the regulations made thereunder and subject to the limitations thereof, this drinking water works permit is issued under Part V of the *Safe Drinking Water Act*, 2002, S.O. 2002, c. 32 to:

The Corporation of the Town of Fort Frances

320 Portage Avenue
Fort Frances, ON
P9A 3P9

For the following municipal residential drinking water system:

Fort Frances Drinking Water System

This drinking water works permit includes the following:

Schedule	Description
Schedule A	Drinking Water System Description
Schedule B	General
Schedule C	All documents issued as Schedule C to this drinking water works permit which authorize alterations to the drinking water system
Schedule D	Process Flow Diagrams

DATED at TORONTO this 13th day of May, 2016

Signature

Aziz Ahmed, P.Eng.
Director
Part V, *Safe Drinking Water Act*, 2002

Schedule A: Drinking Water System Description

System Owner	**The Corporation of the Town of Fort Frances**
Permit Number	**224-201**
Drinking Water System Name	**Fort Frances Drinking Water System**
Schedule A Issue Date	**May 13th, 2016**

1.0 System Description

1.1 The following is a summary description of the works comprising the above drinking water system:

Overview

The **Fort Frances Drinking Water System** consists of a drinking water treatment plant, a two-celled storage ground reservoir, an elevated storage tank and approximately 6.0 kilometers of trunk watermains and 70.4 kilometers of distribution watermains.

The Fort Frances Water Treatment Plant is a conventional surface water treatment plant. Raw water is drawn from Rainy River through low lift pumps. Liquid alum is added to the raw water ahead of the in-line mixer for coagulation while polyelectrolytes are added to the solids contact tanks for assisting flocculation. The water then flows to the two solids contact clarifiers units, operating in parallel, where flocculation and sedimentation occurs. The settled floc is disposed of to the sanitary sewer. Powdered activated carbon, soda ash, and hydrofluosilicic are also added ahead of in-line mixer, in solids contact clarifiers, and/or in chemical contact chambers, as needed, for taste and odour and pH adjustment. The settled effluent is gravity fed to four dual media gravity sand filters. The filters are equipped with a backwash pump. The filtered water flows to a two-celled, ground storage reservoir through a chemical contact chamber. Chlorine and fluoride are added in the chemical contact chamber. The treated water then flows to the high lift pump wells where it is pumped to the distribution system. Chlorine residual and fluoride are monitored with continuous on-line analyzers just prior to the water leaving the plant. The Fort Frances Drinking Water System also includes an elevated water storage tank within the distribution system equipped with re-chlorination facilities.

Fort Frances Water Treatment Plant

Treatment Plant

Location and General Description

Name	Fort Frances Water Treatment Plant housed in an approximately 46 m by 32 m masonry structure
Street Address	901 Colonization Road East
UTM Coordinates	NAD 83: Zone 15 +/- 10m: Easting 472938: Northing 5384735
System Type	Treatment, storage and distribution
Notes	Houses screen chamber, low and high lift pumps, solids contact clarifiers, filters, chemical storage and feeding equipment, instrumentation and control, an administration area comprising of an office, lunchroom, washrooms and control room/laboratory

Surface Water Supply

Raw Water Intake

Description	Approximately 190 m of 630 mm diameter intake pipe located in the Rainy River including an upturned elbow intake structure with a coarse bar screen
Source	Rainy River
Location	Approximately 190 m east of the Water Treatment Plant in Rainy River
Notes	

Low Lift Works

Screens

Description	A raw water screen chamber equipped with two sets of screens
Dimensions	Each screen 2.25 m^2 in area
Notes	Screen chamber located ahead of raw water pumping well

Low Lift Pumps

Description	Three (3) vertical turbine low lift pumps
Capacity	- Two (2) pumps rated at 100 L/s against a total dynamic head (TDH) of 14 m - One (1) VFD pump capable of providing flows in the range of 40 to 150 L/s against a total dynamic head (TDH) of 14m
Metering Device	Equipped with one metering device for measuring raw water flows
Notes	

Coagulation

In-Line Mixer

Description	An in-line mixer located downstream of the low lift pumps within the influent (raw water) line to facilitate the dosing of liquid alum, activated carbon slurry and soda ash solution
Dimensions	450 mm diameter
Notes	Located between low lift pumps and solids contact clarifiers

Flocculation/Clarification

Flocculation/Clarification Tanks - Solids Contact Clarifiers

Description	Two (2) solids contact clarifier units, operating in parallel equipped with facilities for polymer dosing
Dimensions	Each solids contact clarifier approximately 13.7 m x 13.7 m x 3.75 m side water depth (s.w.d.)
Notes	The settled floc is discharged to sanitary sewer

Filtration

Filters

Description	Four (4) dual media, gravity filters (sand and anthracite)
Dimensions	Each filter approximately 4.9 m x 4.9 m providing a total filtration area of 96 m^2
Equipment	One (1) vertical turbine backwash pump capable of delivering 290.3 L/s at 14 m TDH
	A turbidimeter on each filter
	All filters equipped with an underdrain and air scouring system
Notes	

Instrumentation and Control

SCADA System

Description	A computerized control system monitoring the critical components of the process including raw and finished water quantity and quality
Equipment	Four (4) turbidimeters for continuously monitoring filter effluent
	One (1) laboratory model turbidimeter for manual testing
	One (1) continuous chlorine/fluoride analyzer monitoring free chlorine and fluoride residual in the discharge pipe of the high lift pumps
	Three (3) flowmeters to measure flow at various locations
Notes	Status of the elevated storage tank by telemetry, receiving alarms and controlling the operation

Waste Residual Management

Outfall Pipe

Description	Filter backwash disposal
Dimensions	Approximately 60 m of 800 mm diameter pipe
	One (1) vertical turbine backwash pump capable of delivering 290.3 L/s at 14 m TDH
Notes	Filter backwash water returned to Rainy River through outfall line

Sludge Disposal

Description	Solids contact clarifier settled sludge disposal
Equipment	Settled sludge discharged through a 150 mm pipe using pneumatic blow down valves - gravity system, no pumps utilized
Notes	Solids contact clarifier settled sludge discharged to the sanitary sewer system

High Lift Works

High Lift Pumps

Description	Four (4) vertical turbine high lift pumps and one (1) diesel engine driven vertical turbine fire pump
Capacity	Two (2) vertical turbine pumps rated at 63.1 L/s. at TDH of 55m
	One (1) vertical turbine pump rated at 94.7 L/s at TDH of 55m
	One (1) vertical turbine pump rated at 126.2 L/s at a TDH of 55m
High Lift Pump Chamber	470 m^3 capacity
Notes	

On-Site Storage

Chemical Contact Chamber

Description	One (1) chemical contact chamber to provide chlorine contact time
Volume	240 m^3
Notes	

Clearwell/Reservoir

Description	Two-celled, ground storage reservoir
Capacity	Cell No. 1 = 2,565 m^3 Cell No. 2 = 1,465 m^3 Total = 4,030 m^3
Notes	The two cells receive filtered water after passing through chemical contact chamber

Emergency Power

Backup Power Supply

Description	One (1) 450 kW diesel generator set for use during power outage situations
Notes	

Chemical Addition

Alum

Description	Alum feed system for coagulation
Feed Point	Liquid alum to the raw water ahead of the in-line mixer for coagulation
Equipment	A chemical metering pump with a calibration cylinder controlled automatically on the basis of the raw water flow complete with alum storage
	A day tank with secondary spill containment
Notes	

Chlorine

Description	Chlorine gas disinfection System
Feed Point(s)	1. Chemical contact chamber; and 2. Before the flash mixer
Equipment	One (1) duty chlorinator
	One (1) standby chlorinator including: - two (2) chlorine cylinders with an automatic switch over device in a separate room - a weight scale - one (1) chemical metering pump - a free chlorine analyzer for monitoring finished water residuals
Notes	

Hydrofluosilicic Acid

Description	Fluoridation system
Feed Point	Chemical Contact Chamber
Equipment	One (1) day tank
	One (1) chemical metering pump
	Secondary spill containment
Notes	

Polyelectrolytes/Polymer

Description	- A polyelectrolytes feed system for assisting in flocculation - A polymer feed system for assisting in flocculation (used as back-up)
Feed Point	Solids Contact Clarifiers
Equipment	- Two (2) chemical metering pumps for polyelectrolytes injection complete with aging and batch tanks - Two (2) chemical metering pumps for polymer injection complete with aging and solution tanks (used as back-up)
Notes	

Powdered Activated Carbon

Description	Powdered activated carbon for taste and odor control
Feed Point	Ahead of in-line mixer or solids contact clarifiers
Equipment	One (1) slurry tank
	One (1) chemical metering pump
	Secondary spill containment
	A dust control system
Notes	

Soda Ash

Description	Soda ash dosing system for pH adjustment
Feed Point #1	Chemical contact chamber
Feed Point #2	Solid contact clarifiers
Feed Point #3	In-line mixture
Equipment	A silo inside the building
	One (1) day tank
	Volumetric feeder
	A dust collector
Notes	

Elevated Storage Tank

Description	An elevated storage tank
Location	South-east side of the intersection of Colonization Road West and McIrvine Road
UTM Coordinates	NAD 83: Zone 15 +/- 10: Easting 468540: Northing 5383616
Capacity	4,500 m^3
Equipment	Includes calcium hypochlorite re-chlorination facility along with: - a telemetry system providing the water level information to the main computer at the plant; and - a looped circulation system
Notes	

Watermains

1.2 Watermains within the distribution system comprise:

1.2.1 Watermains that have been set out in each document or file identified in column 1 of Table 1.

Table 1: Watermains

Column 1 Document or File Name	Column 2 Date
WATER DISTRIBUTION SYSTEM - December 16, 2015.pdf	December 16, 2015

1.2.2 Watermains that have been added, modified, replaced or extended further to the provisions of Schedule C of this drinking water works permit on or after the date identified in column 2 of Table 1 for each document or file identified in column 1.

1.2.3 Watermains that have been added, modified, replaced or extended further to an authorization by the Director on or after the date identified in column 2 of Table 1 for each document or file identified in column 1.

Schedule B: General

System Owner	**The Corporation of the Town of Fort Frances**
Permit Number	**224-201**
Drinking Water System Name	**Fort Frances Drinking Water System**
Schedule B Issue Date	**May 13th, 2016**

1.0 Applicability

1.1 In addition to any other requirements, the drinking water system identified above shall be altered and operated in accordance with the conditions of this drinking water works permit and the licence.

1.2 The definitions and conditions of the licence shall also apply to this drinking water works permit.

2.0 Alterations to the Drinking Water System

2.1 Any document issued by the Director as a Schedule C to this drinking water works permit shall provide authority to alter the drinking water system in accordance, where applicable, with the conditions of this drinking water works permit and the licence.

2.2 All Schedule C documents issued by the Director for the drinking water system shall form part of this drinking water works permit.

2.3 All parts of the drinking water system in contact with drinking water which are:

2.3.1 Added, modified, replaced, extended; or

2.3.2 Taken out of service for inspection, repair or other activities that may lead to contamination,

shall be disinfected before being put into service in accordance with a procedure approved by the Director or in accordance with the applicable provisions of the following documents:

a) The ministry's Watermain Disinfection Procedure, effective January 01, 2017;
b) AWWA C652 – Standard for Disinfection of Water-Storage Facilities;
c) AWWA C653 – Standard for Disinfection of Water Treatment Plants; and
d) AWWA C654 – Standard for Disinfection of Wells.

2.4 The owner shall notify the Director within thirty (30) days of the placing into service or the completion of any addition, modification, replacement or extension of the drinking water system which had been authorized through:

2.4.1 Schedule B to this drinking water works permit which would require an alteration of the description of a drinking water system component described in Schedule A of this drinking water works permit;

2.4.2 Any Schedule C to this drinking water works permit respecting works other than watermains; or

2.4.3 Any approval issued prior to the issue date of the first drinking water works permit respecting works other than watermains which were not in service at the time of the issuance of the first drinking water works permit.

2.5 For greater certainty, the notification requirements set out in condition 2.4 do not apply to any addition, modification, replacement or extension in respect of the drinking water system which:

2.5.1 Is exempt from subsection 31(1) of the SDWA by subsection 9.(2) of O. Reg. 170/03;

2.5.2 Constitutes maintenance or repair of the drinking water system; or

2.5.3 Is a watermain authorized by condition 3.1 of Schedule B of this drinking water works permit.

2.6 The owner shall notify the legal owner of any part of the drinking water system that is prescribed as a municipal drinking water system by section 2 of O. Reg. 172/03 of the requirements of the licence and this drinking water works permit as applicable to the prescribed system.

2.7 For greater certainty, any alteration to the drinking water system made in accordance with this drinking water works permit may only be carried out after other legal obligations have been complied with including those arising from the *Environmental Assessment Act*, *Niagara Escarpment Planning and Development Act*, *Oak Ridges Moraine Conservation Act, 2001* and *Greenbelt Act, 2005*.

3.0 Watermain Additions, Modifications, Replacements and Extensions

3.1 The drinking water system may be altered by adding, modifying, replacing or extending a watermain within the distribution system subject to the following conditions:

3.1.1 The design of the watermain addition, modification, replacement or extension:

a) Has been prepared by a Professional Engineer;

b) Has been designed only to transmit water and has not been designed to treat water;

c) Satisfies the design criteria set out in the Ministry of the Environment and Climate Change publication “Watermain Design Criteria for Future Alterations Authorized under a Drinking Water Works Permit – June 2012”, as amended from time to time; and

d) Is consistent with or otherwise addresses the design objectives contained within the Ministry of the Environment and Climate Change publication “Design Guidelines for Drinking Water Systems, 2008”, as amended from time to time.

3.1.2 The maximum demand for water exerted by consumers who are serviced by the addition, modification, replacement or extension of the watermain will not result in an exceedance of the rated capacity of a treatment subsystem or the maximum flow rate for a treatment subsystem component as specified in the licence, or the creation of adverse conditions within the drinking water system.

3.1.3 The watermain addition, modification, replacement or extension will not adversely affect the distribution system's ability to maintain a minimum pressure of 140 kPa at ground level at all points in the distribution system under maximum day demand plus fire flow conditions.

3.1.4 Secondary disinfection will be provided to water within the added, modified, replaced or extended watermain to meet the requirements of O. Reg. 170/03.

3.1.5 The watermain addition, modification, replacement or extension is wholly located within the municipal boundary over which the owner has jurisdiction.

3.1.6 The owner of the drinking water system consents in writing to the watermain addition, modification, replacement or extension.

3.1.7 A Professional Engineer has verified in writing that the watermain addition, modification, replacement or extension meets the requirements of condition 3.1.1.

3.1.8 The owner of the drinking water system has verified in writing that the watermain addition, modification, replacement or extension meets the requirements of conditions 3.1.2 to 3.1.6.

3.2 The authorization for the addition, modification, replacement or extension of a watermain provided for in condition 3.1 does not include the addition, modification, replacement or extension of a watermain that:

3.2.1 Passes under or through a body of surface water, unless trenchless construction methods are used;

3.2.2 Has a nominal diameter greater than 750 mm;

3.2.3 Results in the fragmentation of the drinking water system; or

3.2.4 Connects to another drinking water system, unless:

a) Prior to construction, the owner of the drinking water system seeking the connection obtains written consent from the owner or owner's delegate of the drinking water system being connected to; and

b) The owner of the drinking water system seeking the connection retains a copy of the written consent from the owner or owner's delegate of the drinking water system being connected to as part of the record that is recorded and retained under condition 3.3.

3.3 The verifications required in conditions 3.1.7 and 3.1.8 shall be:

3.3.1 Recorded on "Form 1 – Record of Watermains Authorized as a Future Alteration", as published by the Ministry of the Environment and Climate Change, prior to the watermain addition, modification, replacement or extension being placed into service; and

3.3.2 Retained for a period of ten (10) years by the owner.

3.4 For greater certainty, the verification requirements set out in condition 3.3 do not apply to any addition, modification, replacement or extension in respect of the drinking water system which:

3.4.1 Is exempt from subsection 31(1) of the SDWA by subsection 9.(2) of O. Reg. 170/03; or

3.4.2 Constitutes maintenance or repair of the drinking water system.

3.5 The document or file referenced in Column 1 of Table 1 of Schedule A of this drinking water works permit that sets out watermains shall be retained by the owner and shall be updated to include watermain additions, modifications, replacements and extensions within 12 months of the addition, modification, replacement or extension.

3.6 The updates required by condition 3.5 shall include watermain location relative to named streets or easements and watermain diameter.

4.0 Minor Modifications to the Drinking Water System

4.1 The drinking water system may be altered by adding, modifying or replacing the following components in the drinking water system:

4.1.1 Raw water pumps and treatment process pumps in the treatment system;

4.1.2 Coagulant feed systems in the treatment system, including the location and number of dosing points;

4.1.3 Valves;

4.1.4 Instrumentation and controls, including SCADA systems, and software associated with these devices;

4.1.5 Filter media, backwashing equipment and under-drains in the treatment system; or,

4.1.6 Spill containment works.

4.2 The drinking water system may be altered by adding, modifying, replacing or removing the following components in the drinking water system:

4.2.1 Treated water pumps and associated equipment;

4.2.2 Re-circulation devices within distribution system storage facilities;

4.2.3 In-line mixing equipment;

4.2.4 Chemical metering pumps and chemical handling pumps;

4.2.5 Chemical storage tanks (excluding fuel storage tanks) and associated equipment; or,

4.2.6 Measuring and monitoring devices that are not required by regulation, by a condition in the Drinking Water Works Permit, or by a condition otherwise imposed by the Ministry of the Environment and Climate Change.

4.3 The drinking water system may be altered by replacing the following:

4.3.1 Raw water piping, treatment process piping or treated water piping within the treatment subsystem;

4.3.2 Fuel storage tanks and spill containment works, and associated equipment; or

4.3.3 Coagulants and pH adjustment chemicals, where the replacement chemicals perform the same function;

a) Prior to making any alteration to the drinking water system under condition 4.3.3, the owner shall undertake a review of the impacts that the alteration might have on corrosion control or other treatment processes; and

b) The owner shall notify the Director in writing within thirty (30) days of any alteration made under condition 4.3.3 and shall provide the Director with a copy of the review.

4.4 Any alteration of the drinking water system made under conditions 4.1, 4.2 or 4.3 shall not result in:

4.4.1 An exceedance of a treatment subsystem rated capacity or a treatment subsystem component maximum flow rate as specified in the licence;

4.4.2 The bypassing of any unit process within a treatment subsystem;

4.4.3 A deterioration in the quality of drinking water provided to consumers;

4.4.4 A reduction in the reliability or redundancy of any component of the drinking water system;

4.4.5 A negative impact on the ability to undertake compliance and other monitoring necessary for the operation of the drinking water system; or

4.4.6 An adverse effect on the environment.

4.5 The owner shall verify in writing that any addition, modification, replacement or removal of drinking water system components in accordance with conditions 4.1, 4.2 or 4.3 has met the requirements of the conditions listed in condition 4.4.

4.6 The verifications and documentation required in condition 4.5 shall be:

4.6.1 Recorded on "Form 2 – Record of Minor Modifications or Replacements to the Drinking Water System", as published by the Ministry of the Environment and Climate Change, prior to the modified or replaced components being placed into service; and

4.6.2 Retained for a period of ten (10) years by the owner.

4.7 For greater certainty, the verification requirements set out in conditions 4.5 and 4.6 do not apply to any addition, modification, replacement or removal in respect of the drinking water system which:

4.7.1 Is exempt from subsection 31(1) of the SDWA by subsection 9.(2) of O. Reg. 170/03; or

4.7.2 Constitutes maintenance or repair of the drinking water system.

4.8 The owner shall update any drawings maintained for the drinking water system to reflect the modification or replacement of the works, where applicable.

5.0 Equipment with Emissions to the Air

5.1 The drinking water system may be altered by adding, modifying or replacing any of the following drinking water system components that may discharge or alter the rate or manner of a discharge of a compound of concern to the atmosphere:

5.1.1 Any equipment, apparatus, mechanism or thing that is used for the transfer of outdoor air into a building or structure that is not a cooling tower;

5.1.2 Any equipment, apparatus, mechanism or thing that is used for the transfer of indoor air out of a space used for the production, processing, repair, maintenance or storage of goods or materials, including chemical storage;

5.1.3 Laboratory fume hoods used for drinking water testing, quality control and quality assurance purposes;

5.1.4 Low temperature handling of compounds with a vapor pressure of less than 1 kilopascal;

5.1.5 Maintenance welding stations;

5.1.6 Minor painting operations used for maintenance purposes;

5.1.7 Parts washers for maintenance shops;

5.1.8 Emergency chlorine and ammonia gas scrubbers and absorbers;

5.1.9 Venting for activated carbon units for drinking water taste and odour control;

5.1.10 Venting for a stripping unit for methane removal from a groundwater supply;

5.1.11 Venting for an ozone treatment unit;

5.1.12 Natural gas or propane fired boilers, water heaters, space heaters and make-up air units with a total facility-wide heat input rating of less than 20 million kilojoules per hour, and with an individual fuel energy input of less than or equal to 10.5 gigajoules per hour; or

5.1.13 Emergency generators that fire No. 2 fuel oil (diesel fuel) with a sulphur content of 0.5 per cent or less measured by weight, natural gas, propane, gasoline or biofuel, and that are used for emergency duty only with periodic testing.

5.2 The owner shall not add, modify or replace a drinking water system component set out in condition 5.1 for an activity that is not directly related to the treatment and/or distribution of drinking water.

5.3 The emergency generators identified in condition 5.1.13 shall not be used for non-emergency purposes including the generation of electricity for sale or for peak shaving purposes.

5.4 The owner shall prepare an emission summary table for nitrogen oxide emissions only, for each addition, modification or replacement of emergency generators identified in condition 5.1.13.

Performance Limits

5.5 The owner shall ensure that a drinking water system component identified in conditions 5.1.1 to 5.1.13 is operated at all times to comply with the following limits:

5.5.1 For equipment other than emergency generators, the maximum concentration of any compound of concern at a point of impingement shall not exceed the corresponding point of impingement limit;

5.5.2 For emergency generators, the maximum concentration of nitrogen oxides at sensitive populations shall not exceed the applicable point of impingement limit, and at non-sensitive populations shall not exceed the Ministry of the Environment and Climate Change half-hourly screening level of 1880 ug/m^3 as amended; and

5.5.3 The noise emissions comply at all times with the limits set out in publication NPC-300, as applicable.

5.6 The owner shall verify in writing that any addition, modification or replacement of works in accordance with condition 5.1 has met the requirements of the conditions listed in condition 5.5.

5.7 The owner shall document how compliance with the performance limits outlined in condition 5.5.3 is being achieved, through noise abatement equipment and/or operational procedures.

5.8 The verifications and documentation required in conditions 5.6 and 5.7 shall be:

5.8.1 Recorded on “Form 3 – Record of Addition, Modification or Replacement of Equipment Discharging a Contaminant of Concern to the Atmosphere”, as published by the Ministry of the Environment and Climate Change, prior to the additional, modified or replacement equipment being placed into service; and

5.8.2 Retained for a period of ten (10) years by the owner.

5.9 For greater certainty, the verification and documentation requirements set out in conditions 5.6 and 5.8 do not apply to any addition, modification or replacement in respect of the drinking water system which:

5.9.1 Is exempt from subsection 31(1) of the SDWA by subsection 9.(2) of O. Reg. 170/03; or

5.9.2 Constitutes maintenance or repair of the drinking water system.

5.10 The owner shall update any drawings maintained for the works to reflect the addition, modification or replacement of the works, where applicable.

6.0 Previously Approved Works

6.1 The owner may add, modify, replace or extend, and operate part of a municipal drinking water system if:

6.1.1 An approval was issued after January 1, 2004 under section 36 of the SDWA in respect of the addition, modification, replacement or extension and operation of that part of the municipal drinking water system;

6.1.2 The approval expired by virtue of subsection 36(4) of the SDWA; and

6.1.3 The addition, modification, replacement or extension commenced within five years of the date that activity was approved by the expired approval.

7.0 System-Specific Conditions

7.1 Not Applicable.

8.0 Source Protection

8.1 Not Applicable.

Schedule D: Process Flow Diagrams

System Owner	**The Corporation of the Town of Fort Frances**
Permit Number	**224-201**
Drinking Water System Name	**Fort Frances Drinking Water System**
Schedule D Issue Date	**May 13th, 2016**

1.0 Process Flow Diagrams

Fort Frances Water Treatment Plant

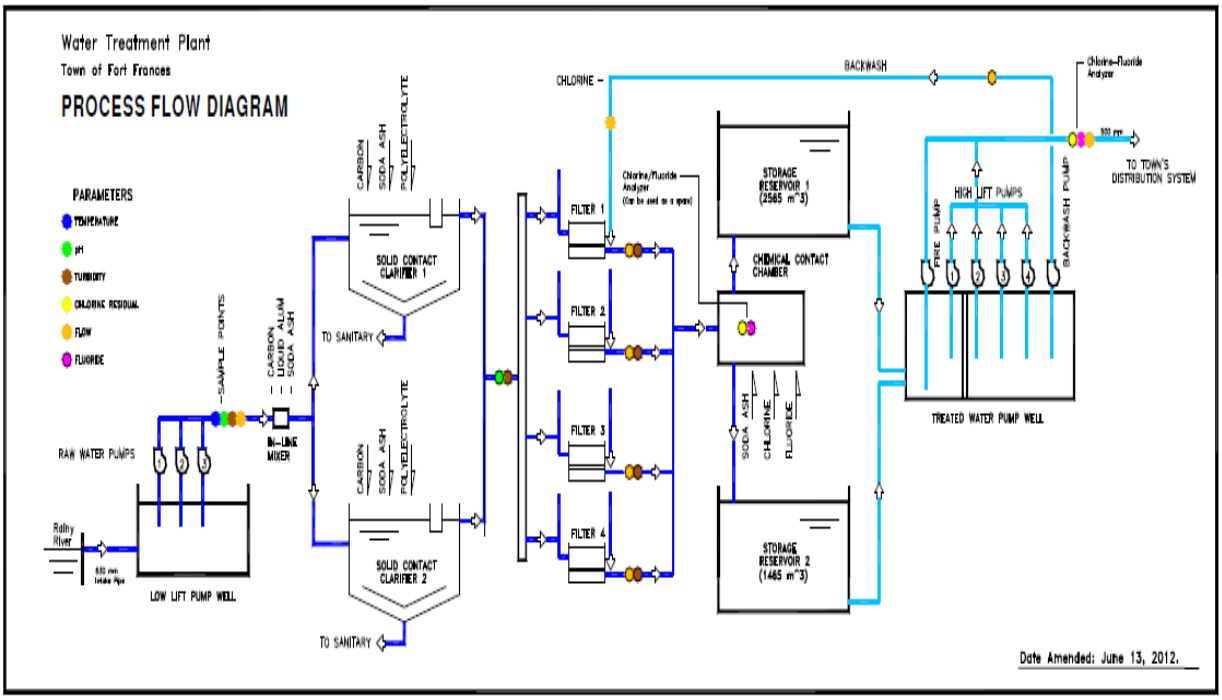

[Source: Quality Management System Operational Plan Town of Fort Frances Water System, Revision No. 8, October 30, 2015]

Appendix "C"

PERMIT TO TAKE WATER
Surface Water
Number 3528-AE6PEM

Ontario

Ministry of the Environment and Climate Change
Ministère de l'Environnement et de l'Action en matière de changement climatique

PERMIT TO TAKE WATER
Surface Water
NUMBER 3528-AE6PEM

Pursuant to Section 34.1 of the Ontario Water Resources Act, R.S.O. 1990 this Permit To Take Water is hereby issued to:

The Corporation of the Town of Fort Frances
320 Portage Ave
Fort Frances, Ontario, P9A 3P9
Canada

For the water taking from: Rainy River

Located at: 901 Colonization Rd E
Fort Frances, District of Rainy River

For the purposes of this Permit, and the terms and conditions specified below, the following definitions apply:

DEFINITIONS

(a) "Director" means any person appointed in writing as a Director pursuant to section 5 of the OWRA for the purposes of section 34.1, OWRA.

(b) "Provincial Officer" means any person designated in writing by the Minister as a Provincial Officer pursuant to section 5 of the OWRA.

(c) "Ministry" means Ontario Ministry of the Environment and Climate Change.

(d) "District Office" means the Kenora District Office.

(e) "Permit" means this Permit to Take Water No. 3528-AE6PEM including its Schedules, if any, issued in accordance with Section 34.1 of the OWRA.

(f) "Permit Holder" means The Corporation of the Town of Fort Frances.

(g) "OWRA " means the *Ontario Water Resources Act,* R.S.O. 1990, c. O. 40, as amended.

You are hereby notified that this Permit is issued subject to the terms and conditions outlined below:

TERMS AND CONDITIONS

1. Compliance with Permit

1.1 Except where modified by this Permit, the water taking shall be in accordance with the application for this Permit To Take Water, dated September 12, 2016 and signed by Douglas Herr, and all Schedules included in this Permit.

1.2 The Permit Holder shall ensure that any person authorized by the Permit Holder to take water under this Permit is provided with a copy of this Permit and shall take all reasonable measures to ensure that any such person complies with the conditions of this Permit.

1.3 Any person authorized by the Permit Holder to take water under this Permit shall comply with the conditions of this Permit.

1.4 This Permit is not transferable to another person.

1.5 This Permit provides the Permit Holder with permission to take water in accordance with the conditions of this Permit, up to the date of the expiry of this Permit. This Permit does not constitute a legal right, vested or otherwise, to a water allocation, and the issuance of this Permit does not guarantee that, upon its expiry, it will be renewed.

1.6 The Permit Holder shall keep this Permit available at all times at or near the site of the taking, and shall produce this Permit immediately for inspection by a Provincial Officer upon his or her request.

1.7 The Permit Holder shall report any changes of address to the Director within thirty days of any such change. The Permit Holder shall report any change of ownership of the property for which this Permit is issued within thirty days of any such change. A change in ownership in the property shall cause this Permit to be cancelled.

2. General Conditions and Interpretation

2.1 Inspections
The Permit Holder must forthwith, upon presentation of credentials, permit a Provincial Officer to carry out any and all inspections authorized by the OWRA, the *Environmental Protection Act* , R.S.O. 1990, the *Pesticides Act* , R.S.O. 1990, or the *Safe Drinking Water Act,* S. O. 2002.

2.2 Other Approvals
The issuance of, and compliance with this Permit, does not:

(a) relieve the Permit Holder or any other person from any obligation to comply with any other applicable legal requirements, including the provisions of the *Ontario Water Resources Act* , and the *Environmental Protection Act* , and any regulations made thereunder; or

(b) limit in any way any authority of the Ministry, a Director, or a Provincial Officer, including the authority to require certain steps be taken or to require the Permit Holder to furnish any further information related to this Permit.

2.2.1 Prior to the taking of any water under the authorization of the Permit to Take Water, the Permit Holder shall ensure full compliance with the Safe Drinking Water Act, 2002 and its regulations. At no time does this permit authorize the taking of water when out of compliance with the Safe Drinking Water Act, 2002 and its regulations.

2.3 Information

The receipt of any information by the Ministry, the failure of the Ministry to take any action or require any person to take any action in relation to the information, or the failure of a Provincial Officer to prosecute any person in relation to the information, shall not be construed as:

(a) an approval, waiver or justification by the Ministry of any act or omission of any person that contravenes this Permit or other legal requirement; or

(b) acceptance by the Ministry of the information's completeness or accuracy.

2.4 Rights of Action

The issuance of, and compliance with this Permit shall not be construed as precluding or limiting any legal claims or rights of action that any person, including the Crown in right of Ontario or any agency thereof, has or may have against the Permit Holder, its officers, employees, agents, and contractors.

2.5 Severability

The requirements of this Permit are severable. If any requirements of this Permit, or the application of any requirements of this Permit to any circumstance, is held invalid or unenforceable, the application of such requirements to other circumstances and the remainder of this Permit shall not be affected thereby.

2.6 Conflicts

Where there is a conflict between a provision of any submitted document referred to in this Permit, including its Schedules, and the conditions of this Permit, the conditions in this Permit shall take precedence.

3. Water Takings Authorized by This Permit

3.1 Expiry

This Permit expires on **September 27, 2026**. No water shall be taken under authority of this Permit after the expiry date.

3.2 Amounts of Taking Permitted

The Permit Holder shall only take water from the source, during the periods and at the rates and amounts of taking specified in Table A. Water takings are authorized only for the purposes specified in Table A.

Table A

	Source Name / Description:	Source: Type:	Taking Specific Purpose:	Taking Major Category:	Max. Taken per Minute (litres):	Max. Num. of Hrs Taken per Day:	Max. Taken per Day (litres):	Max. Num. of Days Taken per Year:	Zone/ Easting/ Northing:

1	Rainy River	River	Municipal	Water Supply	12,000	24	17,000,000	365	15 472938 5384735
						Total Taking:	17,000,000		

4. Monitoring

4.1 The Permit Holder shall, on each day water is taken under the authorization of this Permit, record the date, the volume of water taken on that date and the rate at which it was taken. The daily volume of water taken shall be measured by a flow meter or calculated in accordance with the method described in the application for this Permit or as otherwise accepted by the Director. A separate record shall be maintained for each source. The Permit Holder shall keep all records required by this condition current and available at or near the site of the taking and shall produce the records immediately for inspection by a Provincial Officer upon his or her request. The Permit Holder, unless otherwise required by the Director, shall submit, on or before March 31st in every year, the daily water taking data collected and recorded for the previous year to the ministry's Water Taking Reporting System.

5. Impacts of the Water Taking

5.1 Notification

The Permit Holder shall immediately notify the local District Office of any complaint arising from the taking of water authorized under this Permit and shall report any action which has been taken or is proposed with regard to such complaint. The Permit Holder shall immediately notify the local District Office if the taking of water is observed to have any significant impact on the surrounding waters. After hours, calls shall be directed to the Ministry's Spills Action Centre at 1-800-268-6060.

5.2 For Surface-Water Takings

The taking of water (including the taking of water into storage and the subsequent or simultaneous withdrawal from storage) shall be carried out in such a manner that streamflow is not stopped and is not reduced to a rate that will cause interference with downstream uses of water or with the natural functions of the stream.

6. Director May Amend Permit

The Director may amend this Permit by letter requiring the Permit Holder to suspend or reduce the taking to an amount or threshold specified by the Director in the letter. The suspension or reduction in taking shall be effective immediately and may be revoked at any time upon notification by the Director. This condition does not affect your right to appeal the suspension or reduction in taking to the Environmental Review Tribunal under the *Ontario Water Resources Act* , Section 100 (4).

The reasons for the imposition of these terms and conditions are as follows:

1. Condition 1 is included to ensure that the conditions in this Permit are complied with and can be enforced.

2. Condition 2 is included to clarify the legal interpretation of aspects of this Permit.

3. Conditions 3 through 6 are included to protect the quality of the natural environment so as to safeguard the ecosystem and human health and foster efficient use and conservation of waters. These conditions allow for the beneficial use of waters while ensuring the fair sharing, conservation and sustainable use of the waters of Ontario. The conditions also specify the water takings that are authorized by this Permit and the scope of this Permit.

In accordance with Section 100 of the Ontario Water Resources Act, R.S.O. 1990, you may by written Notice served upon me and the Environmental Review Tribunal within 15 days after receipt of this Notice, require a hearing by the Tribunal. Section 101 of the Ontario Water Resources Act, R.S.O. 1990, as amended, provides that the Notice requiring the hearing shall state:

1. The portions of the Permit or each term or condition in the Permit in respect of which the hearing is required, and;
2. The grounds on which you intend to rely at the hearing in relation to each portion appealed.

In addition to these legal requirements, the Notice should also include:

3. The name of the appellant;
4. The address of the appellant;
5. The Permit to Take Water number;
6. The date of the Permit to Take Water;
7. The name of the Director;
8. The municipality within which the works are located;

This notice must be served upon:

The Secretary
Environmental Review Tribunal
655 Bay Street, 15th Floor
Toronto ON
M5G 1E5
Fax: (416) 326-5370
Email: ERTTribunalsecretary@ontario.ca

AND

The Director, Section 34.1, Ministry of the Environment and Climate Change
331-435 James St S
Thunder Bay ON P7E 6S7
Fax: (807) 475-1754

Further information on the Environmental Review Tribunal's requirements for an appeal can be obtained directly from the Tribunal:

by Telephone at	by Fax at	by e-mail at
(416) 212-6349	(416) 326-5370	www.ert.gov.on.ca
Toll Free 1(866) 448-2248	Toll Free 1(844) 213-3474	

This Permit cancels and replaces Permit Number 7280-6UAMD9, issued on 2006/10/05.

Dated at Thunder Bay this 27th day of September, 2016.

Carrie Hutchison

Carrie Hutchison
Director, Section 34.1
Ontario Water Resources Act , R.S.O. 1990

Schedule A

This Schedule "A" forms part of Permit To Take Water 3528-AE6PEM, dated September 27, 2016.

Permit To Take Water 7280-6UAMD9, dated October 5, 2006.

Appendix “D”

2020 Annual Report

Ontario **Drinking-Water Systems Regulation O. Reg. 170/03**

ANNUAL REPORT

Drinking-Water System Number:	**220000978**
Drinking-Water System Name:	**Fort Frances Drinking Water System**
Drinking-Water System Owner:	Town of Fort Frances
Drinking-Water System Category:	Large Municipal Residential System
Period being reported:	January 01, 2020 to December 31, 2020

Complete if your Category is Large Municipal Residential or Small Municipal Residential	***Complete for all other Categories.***
Does your Drinking-Water System serve more than 10,000 people? Yes [ ] No [x] **Is your annual report available to the public at no charge on a web site on the Internet? Yes [x] No [ ]** **Location where Summary Report required under O. Reg. 170/03 Schedule 22 will be available for inspection.** Water Treatment Plant 901 Colonization Road East or Public Works Department 900 Wright Avenue	**Number of Designated Facilities served:** [ ] **Did you provide a copy of your annual report to all Designated Facilities you serve? Yes [ ] No [ ]** **Number of Interested Authorities you report to:** [ ] **Did you provide a copy of your annual report to all Interested Authorities you report to for each Designated Facility? Yes [ ] No [ ]**

Note: For the following tables below, additional rows or columns may be added or an appendix may be attached to the report

List all Drinking-Water Systems (if any), which receive all of their drinking water from your system:

Drinking Water System Name	Drinking Water System Number
Couchiching First Nation & Agency 1 Land between Fort Frances and Couchiching First Nation.	Unknown if designated as a Drinking Water System under Provincial Regulation 170/03.
Walleye Trailer Park	Within the Town of Fort Frances' System Number 220000978
Lakeview Trailer Park	Within the Town of Fort Frances' System Number 220000978
Friesen 5 - Apartment Units	Alberton Township – Private Supplied through Town of Fort Frances' System Number 220000978

Did you provide a copy of your annual report to all Drinking-Water System owners that are connected to you and to whom you provide all of its drinking water?

Yes [x] No [ ]

Indicate how you notified system users that your annual report is available, and is free of charge.

[x] Public access/notice via the web
[x] Public access/notice via Government Office
[ ] Public access/notice via a newspaper
[ ] Public access/notice via Public Request
[ ] Public access/notice via a Public Library
[ ] Public access/notice via other method _____

Describe your Drinking-Water System

INTAKE STRUCTURE:

Located approximately 190 metres southeast of the Water Treatment Plant.

INTAKE LINE:

600mm Polyethylene Pipe.

SCREEN CHAMBER:

Two stainless steel screens.

PUMPWELL:

Raw water enters pump well from screen chamber, gravity feed.

LOW LIFT PUMPS:

Three (3) vertical turbine low lift pumps each electrically driven. Two (2) by 30 hp motors with a rated capacity to deliver 100 L/s and one (1) variable speed drive (40 hp) capable of providing flows in the range of 40 to 150 L/s.

RAW WATER FLOW METERING SYSTEM:

This unit counts the litres of water as it passes through the unit.

IN LINE MIXER:

The mixer is equipped with four (4) chemical application injectors and the following chemicals can be added to the treatment process at this point:

1. Liquid Alum
2. Soda Ash
3. Carbon Slurry
4. Chlorine Solution (per-chlorination is practiced only under exceptional circumstances)

RAW WATER INFLUENT LINE:

This 450mm line carries the raw water to the clarifiers.

CLARIFIERS:

The raw water, after pre-treatment, enters primary mixing and reaction zone of each unit through the 450mm inlet pipe. Activated carbon, soda ash and polymer can be added to the process in this zone.

Recycled solids are drawn up into the bottom of the zone by the re-circulator impellor to be mixed with the incoming pre-treated water. The re-circulated solids provide additional particle surface area to absorb and entrap precipitates in the raw water. The solids settle to the bottom of the clarifier to form a sludge blanket. The pre-treated water then flows upward and into the effluent box.

FILTER INFLUENT FLUME:

Settled water from the effluent box is piped through two (2) 450 mm diameter pipes to the filter influent flume for distribution to the filters.

FILTERS:

Four (4) gravity filters are provided. Each filter consists of ecodyne filtration equipment installed within a square concrete tank. The dual-media gravity filters are to remove any particles in suspension that have carried over from the solids contact clarifiers.

The filter media on top of the underdrain system consists of a 500 mm thickness of anthracite over 400mm thickness of silica sand.

The filtered water then enters the chemical contact chamber.

CHEMICAL CONTACT CHAMBER:

This chamber is located between the two (2) reservoir storage cells and underneath the filters. Soda Ash solution, chlorine solution and hydrofluosilicic acid are added to the process in the chamber.

RESERVOIR CELLS:

Two (2) reservoir cells are provided, cell number 1 has capacity of approximately 2,565 m3 and cell number 2 has capacity of approximately 1,465 m3 (887,665 gallons).

TREATED WATER PUMP WELL:

The treated water pump well contains the filter backwash pump and high lift pumps; numbers 1, 2, and 3. It is located between the two reservoir cells.

HIGH LIFT PUMPS:

These four (4) units draw water from the treated water pump wells. They are of varying capacities and are controlled by the water tower level.

High Lift Pump Number 1: Rated to deliver 63.1 L/s. This pump is equipped with a variable speed drive 60 hp electric motor.

High Lift Pump Number 2: Rated to deliver 94.7 L/s. This pump is equipped with a 100 hp electric motor.

High Lift Pump Number 3: Rated to deliver 126.2 L/S. The pump is equipped with a 125 hp electric motor.

High Lift Pump Number 4: Rated to deliver 63.1 L/s. This pump is equipped with a variable speed drive 60 hp electric motor.

BACKWASH PUMP:

The backwash pump is used for back washing the filters. It draws water from the pump well. This unit is rated to deliver 300 L/s and is equipped with a 75 hp electric motor.

PLANT EFFLUENT DISCHARGE HEADER:

The plant effluent discharge header receives the flow from the high lift pumps and fire pump and directs it to the community's water distribution system.

There are two (2) analyzers - one for chlorine and one for fluoride which continually monitor the concentration of these two chemicals prior to entering the water distribution system.

EMERGENCY STANDBY GENERATOR:

The emergency standby generator is a 450kW unit capable of running all the operational needs of the treatment plant. It automatically comes on-line when there is a power outage and shuts down once the power is restored.

RATED CAPACITY OF THE PLANT:

Capacity: 17,000 m3/day or 3,744,493 gallons/day.

List all water treatment chemicals used over this reporting period

Poly Electrolyte (Coagulant Aid)	787.5 kgs.
Aluminum Sulphate (Main Coagulant)	67026.33 kgs.
Soda Ash (ph Adjustment)	69045.72 kgs.
Chlorine (Disinfection)	8474 kgs.
Fluoride (Dental Aid)	8331 kgs.

Were any significant expenses incurred to?

[x] Install required equipment
[ ] Repair required equipment
[x] Replace required equipment

Please provide a brief description and a breakdown of monetary expenses incurred

A) Water Main Replacement – Scott Street Between Colonization Road East and Reid Avenue (Contracted Works)

The removal and replacement of approximately 65m of existing 150 mm DI water main with new 150 mm PVC water main and 700m of existing 250mm DI water main with new 250mm PVC water main including services and appurtenances, Qty 6 hydrants, Qty 4 – 150mm valves and Qty 7 – 250mm valves – a cost of $703,539.88

B) Water Main Replacement – Colonization Road West Between Armstrong Place and East End of Riverview Cemetery (Contracted Works)

The removal and replacement of approximately 488m of existing 150 mm DI water main with new 150 mm PVC water main including services and appurtenances, Qty 4 hydrants and Qty 3 – 150mm valves – a cost of $487,226.90

C) Water Main Addition – Erin Crescent (Contracted Works)

The installation of approximately 340 metres of new 150 mm PVC water main including 27 new services and appurtenances, Qty 2 hydrants and Qty 1 – 150mm valves – a cost of $410,700.82

D) Water Distribution System – Replaced 7 Valves & 7 Hydrants (Contracted Works)

Valves: VAL312 (150mm); VAL057 (300mm); VAL115 (250mm); VAL124 (150mm); VAL384 (250mm); VAL393 (150mm); VAL111 (300mm)

Hydrants: HYD213; HYD141; HYD127; HYD110; HYD286; HYD276; HYD302

Cost: $148,149.49

D) Water Distribution System – Replaced 2 Valves & Removed 1 Valve (Town of Fort Frances Crew)

VAL433 (150mm) and VAL112 (300mm) replaced and removed VAL113 (250mm) from system.

Estimated Cost: $35,000

Provide details on the notices submitted in accordance with subsection 18(1) of the Safe Drinking-Water Act or section 16-4 of Schedule 16 of O.Reg.170/03 and reported to Spills Action Centre

Incident Date	Parameter	Result	Unit of Measure	Corrective Action	Corrective Action Date
6/15/2020	Total Coliforms	Present	N/A	Campground opening. Resampled. No downstream sample available. DWA was already in place and remained in place until resample results returned with no adverse. Lifted DWA.	6/23/2020
7/21/2020	Total Coliforms	Present	N/A	New Scott St. watermain commissioning. Completed 2nd set of samples and added a third set of samples. 2nd and 3rd set had no adverse.	7/28/2020
9/9/2020	Total Coliforms	Present	N/A	Colonization Rd. West Construction cut and cap of main. DWA in place due to construction prior to adverse sample. Resample twice with no adverse. Lifted DWA.	9/29/2020
9/14/2020	Total Coliforms	Present	N/A	Colonization Rd. West Construction cut and cap of main. DWA in place due to construction prior to adverse sample. Resample twice with no adverse. Lifted DWA.	9/29/2020
12/7/2020	Total Coliforms	Present	N/A	Weekly distribution sample. Placed sample point on DWA. Resampled with no adverse. Lifted DWA.	12/16/2020

Microbiological testing done under the Schedule 10, 11 or 12 of Regulation 170/03, during this reporting period.

	Number of Samples	Range of E. Coli or Fecal Results (min #)-(max #)	Range of Total Coliform Results (min #)-(max #)	Number of HPC Samples	Range of HPC Results (min #)-(max #)
Raw	53	E.C.: <1 - 14	1 - 291	N/A	N/A
Treated	55	0	0	53	0 – 44
Distribution	502	0	0	206	0 – 69

Operational testing done under Schedule 7, 8 or 9 of Regulation 170/03 during the period covered by this Annual Report.

	Number of Grab Samples	Range of Results (min #)-(max #)
Turbidity	8760	0.01 to 0.59 NTU
Chlorine	8760	1.64 to 2.84 mg/L
Fluoride (If the DWS provides fluoridation)	8760	0.51 to 0.92 mg/L

***NOTE**: For continuous monitors use 8760 as the number of samples.*

***NOTE**: Record the unit of measure if it is **not** milligrams per litre.*

Summary of additional testing and sampling carried out in accordance with the requirement of an approval, order or other legal instrument.

Date of legal instrument issued	Parameter	Date Sampled	Result	Unit of Measure
June 01/07	Suspended Solids – Filter 3 (1st Cycle) (2nd Cycle) (3rd Cycle)	Mar 18/20	49.8 2.1 <2.0	mg/L mg/L mg/L
June 01/07	Suspended Solids – Filter 4 (1st Cycle) (2nd Cycle) (3rd Cycle)	June 23/20	34.9 <3.0 <3.0	mg/L mg/L mg/L
June 01/07	Suspended Solids – Filter 1 (1st Cycle) (2nd Cycle) (3rd Cycle)	Sep 22/20	21.2 3.0 <3.0	mg/L mg/L mg/L
June 01/07	Suspended Solids – Filter 1 (1st Cycle) (2nd Cycle) (3rd Cycle)	Dec 21/20	44.7 <3.0 <3.0	mg/L mg/L mg/L

Summary of Inorganic parameters tested during this reporting period or the most recent sample results

Parameter	Sample Date	Result Value	Unit of Measure	Standard (Max.)	Exceedance
Antimony	March 18, 2020	<0.6	µg/L	6	None
Arsenic	March 18, 2020	<1.0	µg/L	10	None
Barium	March 18, 2020	<10	µg/L	1000	None
Boron	March 18, 2020	<50	µg/L	5000	None
Cadmium	March 18, 2020	<0.10	µg/L	5	None
Chromium	March 18, 2020	<1.0	µg/L	50	None
***Lead**			µg/L	10	None
Mercury	March 18, 2020	<0.10	µg/L	1	None
Selenium	March 18, 2020	<1.0	µg/L	50	None
Sodium	March 18, 2020	18.2	mg/L	20	None
Uranium	March 18, 2020	<2.0	µg/L	20	None
Fluoride	November 23, 2020	0.76	mg/L	1.5	None
Nitrite	December 21, 2020	<0.010	mg/L	1.0	None
Nitrate	December 21, 2020	0.020	mg/L	10.0	None

See Note On Next Page

*only for drinking water systems testing under Schedule 15.2; this includes large municipal non-residential systems, small municipal non-residential systems, non-municipal seasonal residential systems, large non-municipal non-residential systems, and small non-municipal non-residential systems

Summary of lead testing under Schedule 15.1 during this reporting period

(applicable to the following drinking water systems; large municipal residential systems, small municipal residential systems, and non-municipal year-round residential systems)

Location Type	Number of Samples	Range of Lead Results (min#) – (max #)	Number of Exceedances
***Plumbing**	8 (2 samples each at 4 locations)	<1.0	0
***Distribution**	4	<1.0 – 6.6	0

Summary of Organic parameters sampled during this reporting period or the most recent sample results

ANALYTE	Sample Date	Result	Units	Detectable Limit	Standard (Max)	Exceedance
1,1-dichloroethylene (vinylidene chloride)	3/18/2020	<0.50	ug/L	0.5	14	None
1,2-Dichlorobenzene	3/18/2020	<0.50	ug/L	0.5	200	None
1,2-Dichloroethane	3/18/2020	<0.50	ug/L	0.5	5	None
1,4-Dichlorobenzene	3/18/2020	<0.50	ug/L	0.5	5	None
2,3,4,6-Tetrachlorophenol	3/18/2020	<0.50	ug/L	0.5	100	None
2,4,6-Trichlorophenol	3/18/2020	<0.50	ug/L	0.5	5	None
2,4-Dichlorophenol	3/18/2020	<0.30	ug/L	0.3	900	None
Alachlor	3/18/2020	<0.10	ug/L	0.1	5	None
Atrazine + N-dealkylated metabolites	3/18/2020	<0.20	ug/L	0.2	5	None
Azinphos-methyl	3/18/2020	<0.10	ug/L	0.1	20	None
Benzene	3/18/2020	<0.50	ug/L	0.5	1	None
Benzo(a)pyrene	3/18/2020	<0.0050	ug/L	0.005	0.01	None
Bromoxynil	3/18/2020	<0.20	ug/L	0.2	5	None
Carbaryl	3/18/2020	<0.20	ug/L	0.2	90	None
Carbofuran	3/18/2020	<0.20	ug/L	0.2	90	None
Carbon tetrachloride	3/18/2020	<0.20	ug/L	0.2	2	None
Chlorpyrifos	3/18/2020	<0.10	ug/L	0.1	90	None
Diazinon	3/18/2020	<0.10	ug/L	0.1	20	None
Dicamba	3/18/2020	<0.20	ug/L	0.2	120	None
Dichloromethane	3/18/2020	<5.0	ug/L	5	50	None
Diclofop-methyl	3/18/2020	<0.20	ug/L	0.2	9	None
Dimethoate	3/18/2020	<0.10	ug/L	0.1	20	None
Diquat	3/18/2020	<1.0	ug/L	1	70	None
Diuron	3/18/2020	<1.0	ug/L	1	150	None
Ethylbenzene	3/18/2020	<0.50	ug/L	0.5	140	None
Glyphosate	3/18/2020	<5.0	ug/L	5	280	None
Malathion	3/18/2020	<0.10	ug/L	0.1	190	None

ANALYTE	Sample Date	Result	Units	Detectable Limit	Standard (Max)	Exceedance
Metolachlor	3/18/2020	<0.10	ug/L	0.1	50	None
Metribuzin	3/18/2020	<0.10	ug/L	0.1	80	None
Monochlorobenzene	3/18/2020	<0.50	ug/L	0.5	80	None
Paraquat	3/18/2020	<1.0	ug/L	1	10	None
Phorate	3/18/2020	<0.10	ug/L	0.1	2	None
Picloram	3/18/2020	<0.20	ug/L	0.2	190	None
Prometryne	3/18/2020	<0.10	ug/L	0.1	1	None
Simazine	3/18/2020	<0.10	ug/L	0.1	10	None
Terbufos	3/18/2020	<0.20	ug/L	0.2	1	None
Tetrachloroethylene (perchloroethylene)	3/18/2020	<0.50	ug/L	0.5	10	None
Toluene	3/18/2020	<0.50	ug/L	0.5	60	None
Total PCBs	3/18/2020	<0.035	ug/L	0.035	3	None
Triallate	3/18/2020	<0.10	ug/L	0.1	230	None
Trichloroethylene	3/18/2020	<0.50	ug/L	0.5	5	None
Trifluralin	3/18/2020	<0.10	ug/L	0.1	45	None
Vinyl chloride	3/18/2020	<0.20	ug/L	0.2	1	None
Xylenes (Total)	3/18/2020	<1.5	ug/L	1.5	90	None
Haloacetic acids (2020 Average) (HAA)	12/21/2020	70.3	ug/L	5.4	80	None
Trihalomethanes (2020 Average) (THM)	12/21/2020	92	ug/L	4.0	100	None

List any Inorganic or Organic parameter(s) that exceeded half the standard prescribed in Schedule 2 of Ontario Drinking Water Quality Standards.

Parameter	Result Value	Unit of Measure	Date of Sample
Sodium	18.2 (STD. – 20)	mg/L	March 18, 2020
HAA	70.3 (STD – 80)	µg/L	December 21, 2020
THM	92 (STD – 100)	µg/L	December 21, 2020
Fluoride	0.76 (STD – 1.5)	Mg/L	November 23, 2020

Appendix "E"

MECP DRINKING WATER SYSTEM INSPECTION PROGRAM
(2020 – 2021 Inspection Report)

Ministry of the Environment, Conservation and Parks

Drinking Water and Environmental Compliance Division, Northern Region
Thunder Bay District, Kenora Office
808 Robertson Street
Kenora, ON P9N 1X9
Tel.: 807 468-2718
Fax: 807 468-2735

Ministère de l'Environnement, de la Protection de la nature et des Parcs

Division de la conformité en matière d'eau potable et d'environnement, Direction régionale du Nord
District de Thunder Bay, Bureau de Kenora
808 rue Robertson
Kenora, ON P9N 1X9
Tel. : 807 468-2718
Téléc.: 807 468-2735

February 24, 2021

Town of Fort Frances
320 Portage Ave.
Fort Frances, ON
P9A 3P9

Attention: Craig Miller, Environmental and Facilities Superintendent

Dear Mr. Miller:

Re: Fort Frances Water Treatment Plant Inspection Report (2019/2020)

Please find attached the 2020/2021 municipal water works inspection report. The announced detailed inspection review period covered the period of time from January 16, 2020 to January 8, 2021. The time and co-operation of all operators involved was greatly appreciated.

Four non-compliance issues were identified during the inspection. Actions required to address each of these non-compliance issues are included on pages 17 through 18 of the inspection report. Please note that "Actions Required" are linked to incidents of non-compliance with regulatory requirements contained within an Act, a Regulation, or site-specific approvals, licenses, permits, orders, or instructions. Such violations could result in the issuance of mandatory abatement instruments including Orders, tickets, penalties, or referrals to the ministry's Investigations and Enforcement Branch.

Best practice issues and associated recommendations, for the continued improvement of operations of the Fort Frances drinking-water system, are provided on page 19 of the inspection report. *"Recommended Actions"* convey information that the owner or operating authority should consider implementing in order to advance efforts already in place to address such issues as emergency preparedness, the fulsome availability of information to consumers, and conformance with existing and emerging industrial standards. Please note that items which appear as recommended actions do not, in themselves, constitute violations.

In order to measure individual inspection results, the Ministry has established an inspection compliance risk framework based on the principles on the Inspection, Investigation & Enforcement (II&E) Secretariat and advice in internal/external risk experts. The Inspection

Summary Rating Record (IRR), included as Appendix B of the inspection report, provides the Ministry, the system owner and the local Public Health Units with a summarized quantitative measure of the drinking water system's annual inspection and regulated water quality testing performance. Please note the attached IRR methodology memo describing how the risk rating model has improved to better reflect the health related and administrative non-compliance found in an inspection report. IRR ratings are published (for the previous inspection year) in the Ministry's Chief Drinking Water Inspector's Annual Report. If you have any questions or concerns regarding the rating, please contact Paula Spencer, Drinking Water Program Supervisor, at (807) 627-7632.

Section 19 of the Safe Drinking Water Act (Standard of Care) creates a number of obligations for individuals who exercise decision-making authority over municipal drinking water systems. Please be aware that the Ministry has encouraged such individuals, particularly municipal councilors, to take steps to be better informed about the drinking water systems over which they have decision-making authority. These steps could include asking for a copy of this inspection report and a review of its findings. Further information about Section 19 can be found in *"Taking Care of Your Drinking Water: A guide for members of municipal council"* found under "Resources" on the Drinking Water Ontario website at www.ontario.ca/drinkingwater.

If you have any questions or comments in regards to this inspection, or if you would like to discuss Ontario's drinking water legislation, please contact Carolyn Lacroix at (807) 707-6346.

Sincerely,

CLacroix

Ministry of the Environment, Conservation and Parks
Thunder Bay District, Kenora Office

CL/cl

cc. Northwestern Health Unit
21 Wolsley Street
Kenora, Ontario
P9N 3W7
Attention: Thomas Nabb, Program Manager

cc. Ministry of Natural Resources and Forestry
922 Scott Street
Fort Frances, Ontario
P9A 6S7
Attention: Greg Chapman, District Manager

cc. Ministry of the Environment, Conservation and Parks
808 Robertson Street
Kenora, Ontario
P9N 1X9
Attention: Paula Spencer, Water Supervisor

cc. Thunder Bay District, Kenora Office
File Number: DK DY WI – 540

Ontario

Ministry of the Environment, Conservation and Parks

FORT FRANCES DRINKING WATER SYSTEM

Inspection Report

Site Number:	220000978
Inspection Number:	1-O99X1
Date of Inspection:	Jan 08, 2021
Inspected By:	Carolyn Lacroix

TABLE OF CONTENTS

Page

Owner Information
- Contact Information 2

Inspection Details
- Drinking Water System Components Description 2

Inspection Summary
- Introduction 4
- Source 4
- Permit to Take Water 5
- Capacity Assessment 5
- Treatment Processes 5
- Treatment Process Monitoring 7
- Process Wastewater 9
- Distribution System 9
- Operations Manuals 10
- Logbooks 11
- Contingency/Emergency Planning 11
- Security 11
- Consumer Relations 12
- Certification and Training 12
- Water Quality Monitoring 12
- Water Quality Assessment 14
- Reporting and Corrective Actions 14

Non-Compliance with Regulatory Requirements and Actions Required 17

Summary of Best Practice Issues and Recommendations 19

Signatures 20

Appendices
- Appendix A – Key Reference Materials
- Appendix B – Inspection Summary Rating Record

OWNER INFORMATION:

Company Name: FORT FRANCES, THE CORPORATION OF THE TOWN OF
Street Number: 320 **Unit Identifier:**
Street Name: PORTAGE Ave
City: FORT FRANCES
Province: ON **Postal Code:** P9A 3P9

CONTACT INFORMATION

INSPECTION DETAILS:

Site Name: FORT FRANCES DRINKING WATER SYSTEM
Site Address: 901 COLONIZATION Road East FORT FRANCES ON P9A 3P9
County/District: FORT FRANCES
MECP District/Area Office: Kenora Area Office
Health Unit: NORTHWESTERN HEALTH UNIT
Conservation Authority:
MNR Office: Fort Frances District Office
Category: Large Municipal Residential
Site Number: 220000978
Inspection Type: Announced
Inspection Number: 1-O99X1
Date of Inspection: Jan 08, 2021
Date of Previous Inspection: Jan 16, 2020

COMPONENTS DESCRIPTION

Site (Name): MOE DWS Mapping
Type: DWS Mapping Point **Sub Type:**

Site (Name): SOURCE
Type: Source **Sub Type:** Surface
Comments:
The raw water supply for the Fort Frances municipal drinking water system is taken from the Rainy River at the outflow of Rainy Lake. The source water is generally of good quality, however it can be subject to elevated levels of colour, turbidity, and dissolved organic carbon.
Source water is gravity-fed into a low-lift pump well located within the plant. It is then drawn through a 630 mm diameter, 190 m long intake line that is equipped at the terminal end with a stainless steel screen. Coarse material is screened at the initial intake point and again through a set of screens within the raw water well.

Site (Name): TREATED WATER
Type: Treated Water POE **Sub Type:** Pumphouse
Comments:
Three (3) vertical turbine low lift pumps deliver raw water through a common header equipped with alum and soda ash injection points, an in-line mixer, and a flow meter. Alum is added at all times when water is being produced;

soda ash is added only when needed based on the pH of the raw water supply. Polymer is then injected as the water passes into two solids contact clarifiers. The clarifiers are equipped with blow-down devices to remove excess sludge, which is discharged to the municipal sanitary sewer. Clarified water passes through one of four dual media (anthracite coal/sand) filters. Each filter effluent line is monitored for pH and turbidity. Water is disinfected in a baffled contact chamber by the addition of chlorine gas. Soda ash, used for pH adjustment is added to the clearwell, as well as hydrofluosilicic acid. Treated water flows are measured using an in-line flow meter.
Four high lift pumps (rated at 63.1 L/s (2), 94.7 L/s and 126.2 L/s) pressurize treated water as it is directed to the distribution system. Distribution system pressure is also maintained by the elevated storage tank located in the southwest portion of Fort Frances.
A complete description of the treatment system can be found in Drinking Water Works Permit No. 224-201.

Site (Name): DISTRIBUTION (WATER INSPECTION)
Type: Other **Sub Type:** Other
Comments:
The Fort Frances distribution system services a population of approximately 8,000 in Town, another 300 people in the neighbouring community of Couchiching First Nation and has one connection to a property in the neighbouring Alberton Township. The distribution system is comprised of ductile steel, cast iron, and PVC piping. The original system was installed in the early 1900's. As older pipes are replaced, PVC piping comprises an increasing proportion of the works. Some sections of the distribution system have been looped at the recommendation of a consulting engineer, however several dead ends still remain. The distribution system is 70.73 kilometres in length and contains 399 fire hydrants.
A 4,500 cubic meter elevated storage tower is located in the southwest portion of the town. A telemetry system is used to maintain water levels in the tower. A paced-to-flow chlorination system injects liquid calcium hypochlorite at the outflow from the storage tower to maintain adequate chlorine residuals in the distribution system.

INSPECTION SUMMARY:

Introduction

- **The primary focus of this inspection is to confirm compliance with Ministry of the Environment, Conservation and Parks (MECP) legislation as well as evaluating conformance with ministry drinking water policies and guidelines during the inspection period. The ministry utilizes a comprehensive, multi-barrier approach in the inspection of water systems that focuses on the source, treatment, and distribution components as well as management practices.**

  This drinking water system is subject to the legislative requirements of the Safe Drinking Water Act, 2002 (SDWA) and regulations made therein, including Ontario Regulation 170/03, "Drinking Water Systems" (O.Reg. 170/03). This inspection has been conducted pursuant to Section 81 of the SDWA.

  This inspection report does not suggest that all applicable legislation and regulations were evaluated. It remains the responsibility of the owner to ensure compliance with all applicable legislative and regulatory requirements.

  This detailed, announced inspection was initiated on January 13, 2021, by Ministry of the Environment, Conservation & Parks (MECP) water inspector, Carolyn Lacroix. The inspection review period is the period of time from the date of the previous MECP inspection conducted on January 16, 2020 to January 8, 2021.
  Due to the circumstances surrounding the COVID-19 global pandemic, the majority of this inspection was completed remotely through email and data sharing. The field portion of the inspection was conducted on February 10, 2021 and was limited to a tour of the water treatment plant (WTP), continuous data review and gathering remaining inspection information.
  Text highlighted in bold-type is computer-generated based on yes/no responses to standard questions answered during the inspection. Supporting information, in regular font, has been added by the undersigned water inspector to qualify standard responses and to provide additional guidance/information.

Source

- **Trends in source water quality were being monitored.**

  The following raw water parameters are documented daily:
  - pH
  - turbidity
  - temperatures

  As a part of the Municipal Drinking Water Licence renewal process, the Town of Fort Frances used the last 5 years of collected raw water data to characterize their source water.

- **The owner did not have a harmful algal bloom monitoring plan in place.**

  The DWS owner does not currently have a Harmful Algal Bloom (HAB) monitoring plan in place.

  The ministry has previously issued guidance via a letter asking surface water systems to monitor for algal blooms. Furthermore, renewed Municipal Drinking Water Licence's (MDWL) will include HAB conditions related to monitoring, sampling and reporting. HAB plans must include details relating to: 1.) visual monitoring for HABs at or near the drinking water system intake(s); 2.) details relating to visual monitoring of shoreline for drinking water systems where the proximity of the intake(s) may be of concern; 3.) details relating to reporting and observed or suspected HAB; 4.) a sampling plan, including the identification of sampling location(s) and frequencies and triggers that may increase the sampling frequency, and 5.) up to date records documenting staff training on the HAB monitoring, reporting and sampling procedures.

Permit To Take Water

- **The owner was in compliance with all conditions of the PTTW.**

  Permit to Take Water (PTTW) #3528-AE6PEM remains valid until September 27, 2026. The permit allows for the maximum taking of water of 17,000,000 L/day.
  The PTTW also requires the following:
  - Daily, record the date, the volume of water taken on that date and the rate at which it was taken.
  - The Permit Holder shall submit, on or before March 31st in every year, the daily water taking data collected and recorded for the previous year to the ministry's Water Taking Reporting System.
  The requirements noted above were met for the review period. Water taking data is documented, as required, in the facility's excel tracking sheet. A summary of the water taken in 2019 was submitted to the ministry. The maximum volume of raw water taken over a 24 hour period during the review period was 6210 m3/day.

Capacity Assessment

- **There was sufficient monitoring of flow as required by the Municipal Drinking Water Licence or Drinking Water Works Permit issued under Part V of the SDWA.**

  Conditions 2.1.1 and 2.1.2, Schedule C, Municipal Drinking Water Licence (MDWL) #224-101, requires continuous measurements and recording of the flow rate and daily volume of raw water flowing into the water treatment plant (WTP) and of treated water flowing from the WTP into the distribution system. The Fort Frances WTP is equipped with one raw water flow meter and one treated water flow meter. Data obtained from the flow meters is transferred and recorded into the facility's SCADA monitoring system.
  On March 4, 2020, the drinking water system's uninterrupted power supply (UPS) failed. As a result, flow data was not recorded from 20:12, on March 4, 2020 to 07:50, on March 5, 2020. Despite flow not being recorded during this time, the raw and treated flow meters continued to operate and accurate daily volumes of water into and leaving the plant were documented.

- **The flow measuring devices were calibrated or verified in accordance with the requirements of the MDWL issued under Part V of the SWDA.**

  Records were provided which demonstrated that the raw and treated water flow meters were last calibrated on August 4, 2020 and the backwash flow meter was calibrated on August 5, 2020. The flow meters had been previously calibrated on June 20, 2019.

- **The owner was in compliance with the conditions associated with maximum flow rate or the rated capacity conditions in the Municipal Drinking Water Licence issued under Part V of the SDWA.**

  Condition 1.1, Schedule C, MDWL #224-101, identifies the rated capacity of the Fort Frances WTP as 17,000 m^3/day. This represents the maximum daily volume of treated water that is allowed to be directed to the distribution system, from the WTP.
  During the review period, the highest volume of treated water pumped to the distribution system, in a single day, was 5880 m3. This represents 34.5% of the plants rated capacity.

- **Appropriate records of flows and any capacity exceedances were made in accordance with the Municipal Drinking Water Licence issued under Part V of the SDWA.**

  In addition to continuously monitoring raw and treated water flow, daily, the total volume of water taken over the previous 24 hours is documented, in addition to the peak instantaneous flow.
  There were no water taking exceedances during the review period.

Treatment Processes

- **The owner had ensured that all equipment was installed in accordance with Schedule A and Schedule C of the Drinking Water Works Permit.**

  During the inspection, ministry staff toured the water treatment plant and the water tower.

Treatment Processes

The following discrepancy was noted in Schedule A of Drinking Water Works Permit (DWWP) #224-201:
• The alum chemical metering pump is described as "having a calibration cylinder controlled automatically on the basis of the raw water flow". A new chemical metering pump has been installed and the new pump does not have a calibration cylinder. The instrument is now calibrated manually by weighing a sample.
During the next Drinking Water Works Permit and Municipal Drinking Water License renewal, the above item is to be updated.

- **The owner/operating authority was in compliance with the requirement to prepare Form 1 documents as required by their Drinking Water Works Permit during the inspection period.**

  Municipal Water Works Permit (MWWP) # 224-201 allows for the Fort Frances drinking water system to be altered by adding, modifying, replacing or extending a watermain within the distribution system if certain conditions are met. These conditions are outlined in MWWP, Schedule B, section 3.0(3.3) and includes the requirement for all work to be recorded on a "Form 1 - Record of Watermains Authorized as a Future Alteration", prior to the watermain, addition, modification.
  During the inspection review period, three form 1 documents were completed for work in the distribution system. It was confirmed that the Form 1 documents were prepared prior to the work being completed and in accordance with the Drinking Water Works Permit.

- **Records indicated that the treatment equipment was operated in a manner that achieved the design capabilities required under Ontario Regulation 170/03 or a Drinking Water Works Permit and/or Municipal Drinking Water Licence issued under Part V of the SDWA at all times that water was being supplied to consumers.**

  In accordance with O. Reg. 170/03, Schedule 1-2(2), surface water systems must have chemically assisted filtration and disinfection and achieve an overall performance of at least a 2-log (99%) removal/inactivation of Cryptosporidium oocysts, a 3-log (99.9%) removal/inactivation of Giardia cysts, and a 4-log (99.99%) removal/inactivation of viruses, by the time the water is delivered to the first consumer. The Fort Frances WTP achieves the above performance criteria using conventional treatment consisting of coagulation, flocculation, sedimentation filtration, and chlorine disinfection.
  Trends on the SCADA system were reviewed to ensure that minimum chlorine residuals were met continuously. Under worst case conditions (temp 0.5 degrees Celsius, pH 7.5, clear-well level 60% capacity, treated water flow 17000 cubic meters per day), the plant must maintain their chlorine residual above 0.85 mg/L. Records reviewed during the inspection confirmed that the system was providing the required level of treatment throughout the inspection review period. If the treated water chlorine residual dropped below the alarm set point, the high lift pumps will shut down and stop the flow of water to the distribution system.
  Monthly turbidity summaries were reviewed to ensure that the filtered water turbidity was less than or equal to 0.3 NTU in 95% of the measurements taken each month. This was met throughout the inspection review period.

- **Records confirmed that the water treatment equipment which provides chlorination or chloramination for secondary disinfection purposes was operated so that at all times and all locations in the distribution system the chlorine residual was never less than 0.05 mg/l free or 0.25 mg/l combined.**

  Distribution chlorine levels must be maintained at or above 0.05 mg/L at all times. The lowest recorded chlorine level in the distribution system during the inspection review period was 0.18 mg/L, on July 5, 2020, from the water tower.

- **Where an activity has occurred that could introduce contamination, all parts of the drinking water system were disinfected in accordance with Schedule B, Condition 2.3 of the Drinking Water Works Permit.**

  Municipal Water Works Permit (MWWP) # 224-201, Schedule B, Condition 2.3 requires all parts of the drinking water system in contact with drinking water which are: added, modified, replaced, extended, or taken out of service for inspection, repair or other activities that lead to contamination, shall be disinfected before being put into service in accordance with the ministry's Watermain Disinfection Procedure.

Treatment Processes

Distribution log books and Watermain Shut Down Reports were reviewed and demonstrated disinfection was taking place for work completed in the distribution system.
During the review period, there was no notable work done at the water treatment plant; however, operators are aware of the requirement to disinfect any piece of equipment/part, that is put into the system, that comes into contact with drinking water. Operators were reminded that they should document in the log book whenever they disinfect a piece of equipment.

- **The owner had evidence indicating that all chemicals and materials that come in contact with water within the drinking water system met the AWWA and ANSI standards in accordance with the Municipal Drinking Water Licence and Drinking Water Works Permit issued under Part V of the SDWA.**

  Chemicals used in the Fort Frances DWS during the inspection review period include:
  - liquid alum for coagulation
  - chlorine gas for disinfection
  - polymer to assist flocculation
  - soda ash for pH adjustment
  - hydrofluosilicic acid for fluoridation
  - calcium hypochlorite for chlorination at the water tower
  - sodium hypochlorite for disinfection in the distribution system

  Supplier statements with ANSI/NSF Standard 60 certification were provided during the inspection for the above noted chemicals. New statements are obtained from the supplier annually.

- **Up-to-date plans for the drinking water system were kept in a place, or made available in such a manner, that they could be readily viewed by all persons responsible for all or part of the operation of the drinking water system in accordance with the DWWP and MDWL issued under Part V of the SDWA.**

  Plant Schematic and blueprints are kept at the water treatment plant. In addition, process flow diagrams for the drinking water system are available in the operations manual. Operators have access to this document electronically.

Treatment Process Monitoring

- **Primary disinfection chlorine monitoring was conducted at a location approved by Municipal Drinking Water Licence and/or Drinking Water Works Permit issued under Part V of the SDWA, or at/near a location where the intended CT has just been achieved.**

  The treated water chlorine residual is monitored by a continuous analyzer at the point where treated water enters the distribution system.

- **Operators were aware of the operational criteria necessary to achieve primary disinfection within the drinking water system.**

- **Continuous monitoring of each filter effluent line was being performed for turbidity.**

  Reg. 170/03, Section 7-3(2)(b) requires the owner of the system to ensure that sampling and testing for turbidity is carried out by continuous monitoring equipment on each filter effluent line.
  All four filters in the WTP are equipped with turbidity analyzers. Continuous turbidity data from each filter is printed daily, reviewed by operators and filed in the WTP office.
  During the review period, on March 4, 2020, at 20:12, due to the failure of the facility's UPS, the facility's main and back-up computer system lost communication with the water plant's controller. As a result of the computer system being down, the continuous SCADA data was not recorded until operators arrived at the plant the following morning, at 07:50. During the time of data loss, the continuous filter effluent turbidity analyzers and alarming system continued to operator. All other systems of the plant were found to be functioning when operators arrived at the water plant the morning of March 5, 2020. The non-compliance with recording filter effluent turbidity every 15

Treatment Process Monitoring

minutes will be addressed in a subsequent question.

- **The secondary disinfectant residual was measured as required for the distribution system.**

  O. Reg. 170/03, Section 7-2(3) requires that the owner and operating authority of a large municipal residential system that provides secondary disinfection shall ensure that at least seven (7) distribution samples are taken each week in accordance with subsection (4). For systems which provide chlorination, samples must be tested immediately for free chlorine residual.
  During the review period, a daily distribution chlorine residual was taken from the water tower. The results are documented in the water tower log book.

- **Operators were examining continuous monitoring test results and they were examining the results within 72 hours of the test.**

  Daily, operators review continuous treated water chlorine residual data, for the previous 24 hours, off the circle chart recorder and filter effluent turbidity from a printout of each filters continuous data, for the previous 24 hour period. In addition, the trending for these parameters are reviewed on the facility's SCADA system, every 24 hours. The operations manual has a standard operating procedure for "Reviewing Continuous Monitoring Turbidity Test Results.

- **Samples for chlorine residual analysis were tested using an acceptable portable device.**

  When continuous monitoring equipment is not being used, chlorine residuals are tested using an electronic hand held portable device.

- **All continuous monitoring equipment utilized for sampling and testing required by O. Reg.170/03, or Municipal Drinking Water Licence or Drinking Water Works Permit or order, were equipped with alarms or shut-off mechanisms that satisfy the standards described in Schedule 6.**

  Currently, the alarm set points for chlorine and turbidity are as follows:
  • Final Effluent Low Chlorine Alarm = 1.6 mg/L - If final effluent chlorine levels drop below this set point, an alarm will sound immediately and the high lift pumps will shut down. The system will run off of the water tower.
  • Final Effluent High Chlorine Alarm = 3.2 mg/L - calls out operator on duty.
  • Filter Effluent Turbidity High Alarm = 0.3 NTU - plant alarm sounds, if the filter effluent turbidity continues to exceed the set point for more than 10 min, the filter that is exceeding will shut down and a call out will be made to the on-call operator.
  • Filter Effluent Turbidity High High Alarm = 0.80 NTU - plant immediately alarms, calls out the on-call operator and filter shuts down.
  • Filter Effluent Turbidity Low Alarm = - 0.01 mg/L.

- **Continuous monitoring equipment that was being utilized to fulfill O. Reg. 170/03 requirements was not performing tests for the parameters with at least the minimum frequency specified in the Table in Schedule 6 of O. Reg. 170/03 and/or was not recording data with the prescribed format.**

  Final effluent chlorine residuals and filter effluent turbidity from of each filter, are read and recorded in the SCADA system every 60 seconds. Final effluent chlorine residuals are also documented on a chart recorder.
  Daily, the SCADA system prints out a summary of all the filter effluent turbidity data. Based on the data collected, every 15 minutes, the mean, maximum and average values of the previous 15 minutes of data are recorded.
  During the inspection, it was confirmed that the minimum testing and recording frequency was met for the inspection review period, except from 20:12, on March 4, 2020 to 07:50, on March 5, 2020. During this time, data was lost due to a failure of the facility's UPS. Upon further evaluation, it was discovered both the main and back up computer failed because they were on the same power circuit. Once aware of the issue, operators immediately hooked up to an external power source and regained operation of their computer system and ability to continuously record data.

Treatment Process Monitoring

Treated water chlorine residual data was also unavailable on the SCADA system for this time period, but the data was available on the chart record.

- **All continuous analysers were calibrated, maintained, and operated, in accordance with the manufacturer's instructions or the regulation.**

  O. Reg. 170/03, section 6-5(1)8, requires that the continuous monitoring equipment must be checked and calibrated in accordance with the manufacturer's instructions.
  The Rosemont Chlorine Residual Analyzer is used to continuously monitor the treated water chlorine residual. The instruction manual for this instrument does not state how frequently the instrument is to be calibrated; therefore, O. Reg. 170/03, Schedule 6, section 6-5(1)10 applies. This section requires that the instrument be checked and calibrated as frequently as necessary to ensure that the margin of error for free chlorine residual test results are within 0.05 mg/L, if the concentrations usually measured by the equipment are less than or equal to 1.0 mg/L, and proportionally higher if the concentrations usually measured are greater than 1.0 mg/L.
  Documentation shows that the treated water chlorine analyzer was last calibrated by an outside party on August 4, 2020 and had been previously calibrated on August 20, 2019. In addition, manual chlorine residuals are taken daily and compared to the on-line analyzer. If the analyzer starts to drift, an in- house calibration is completed.
  Rosemount Clarity II Turbidity Analyzers are used to continuously monitor the filter effluent turbidity on each filter. The instruction manual, for these instruments requires that they be calibrated annually. Documentation shows that the filter 1, 3 and 4 turbidity analyzers were calibrated on Aug. 4 and 5, 2020 and had been previously calibrated on August 20, 2019 (filter #2 was not calibrated because it is currently off-line and there are no plans to bring it back on-line at this time). In addition, in-house calibrations of the # 1, 3 and 4 filter effluent turbidity analyzers are completed.

Process Wastewater

- **The process wastewater and residual solids/sludges were treated, handled and disposed of in accordance with the design requirements approved under the Drinking Water Works Permit and the Municipal Drinking Water Licence.**

  The facility's MDWL/DWWP does not require process wastewater solids/sludges to be treated, handled or disposed of in a certain manner.
  Backwash water from the filters is directed to the municipal sanitary sewage system. Once annually, the plant will be drained and the clarifiers cleaned. Sludge removed from the clarifiers is discharged to the sanitary sewage system as well.
  A written protocol has been developed by the Town for discharging sludge from the drinking water system to the sewage system, to ensure that the wastewater treatment process does not become disrupted/overwhelmed.

- **The process wastewater discharge monitoring program and discharge quality complied with requirements established in the Municipal Drinking Water Licence Issued under Part V of the SDWA.**

  Suspended solids are required to be monitored quarterly at the point of discharge to the Rainy River. Records indicate that manual composite samples were collected quarterly during the inspection review period and were tested for suspended solids. Suspended solids concentration limits are not prescribed by the MDWL.

Distribution System

- **The owner had up-to-date documents describing the distribution components as required.**

  The distribution map shows the distribution components were last updated on January 18, 2021.

- **There is a backflow prevention program, policy and/or bylaw in place.**

  The Town of Fort Frances has adopted Water System Management By-law 16/06 which includes provisions for cross connection control. The Town's backflow prevention program aims at installing backflow prevention devices

Distribution System

at all locations that are deemed to be high risk areas (i.e. mill, car wash, laundromats) and all new businesses are required to have a device installed. Backflow prevention devices are also being installed at locations where water meters are required to be replaced.

- **The owner had a program or maintained a schedule for routine cleanout, inspection and maintenance of reservoirs and elevated storage tanks within the distribution system.**

  The clearwell at the WTP is drained and cleaned out annually. The water tower is on a 5 year inspection rotation with the last inspection occurring in 2015. Due to limitations as a result of the pandemic, the 5 year assessment did take place in 2020.

- **The owner had implemented a program for the flushing of watermains as per industry standards.**

  The Town of Fort Frances flushes 20% of their distribution system annually, on a rotational basis, ensuring that the entire distribution system is flushed over a five year period.

- **Records confirmed that disinfectant residuals were routinely checked at the extremities and "dead ends" of the distribution system.**

  Disinfectant residuals are taken daily at the water tower. Microbiological samples are taken at various locations throughout the town, providing a good representation of disinfectant residuals throughout the distribution system.

- **A program was in place for inspecting and exercising valves.**

  There are approximately 640 valves in the distribution system. Annually, operators exercise 20% of the valves. In addition, the town strives to replace 20 valves annually.

- **There was a program in place for inspecting and operating hydrants.**

  The Town of Fort Frances aims to flush 20% of their hydrants and visually inspect every hydrant annually.

- **There was a by-law or policy in place limiting access to hydrants.**

  By-law no. 16/06 includes provisions restricting the use of fire hydrants for emergency operations and training for the fire department.

- **The owner was able to maintain proper pressures in the distribution system and pressure was monitored to alert the operator of conditions which may lead to loss of pressure below the value under which the system is designed to operate.**

  Water pressure is monitored leaving the plant. There were no water pressure issues in the distribution system during the review period.

- **The donor had provided an Annual Report to the receiver stand alone distribution system(s) connected to this system.**

  The Town of Fort Frances provide copies of the Annual Report to Couchiching FN, Lakeview Trailer Park, Walleye Trailer Park, and an apartment complex located in Alberton Township.

Operations Manuals

- **Operators and maintenance personnel had ready access to operations and maintenance manuals.**

- **The operations and maintenance manuals contained plans, drawings and process descriptions sufficient for the safe and efficient operation of the system.**

- **The operations and maintenance manuals met the requirements of the Drinking Water Works Permit and**

Operations Manuals

Municipal Drinking Water Licence issued under Part V of the SDWA.

Logbooks

- **Logbooks were properly maintained and contained the required information.**

- **Records or other record keeping mechanisms confirmed that operational testing not performed by continuous monitoring equipment was being done by a certified operator, water quality analyst, or person who suffices the requirements of O. Reg. 170/03 7-5.**

  Log book entries indicate that all manual operational testing was completed by certified operators.

- **For every required operational test and every required sample, a record was made of the date, time, location, name of the person conducting the test and result of the test.**

- **The operator-in-charge ensured that records were maintained of all adjustments made to the processes within his or her responsibility.**

- **Logs or other record keeping mechanisms were available for at least five (5) years.**

Contingency/Emergency Planning

- **Spill containment was provided for process chemicals and/or standby power generator fuel.**

- **Clean-up equipment and materials were in place for the clean up of spills.**

- **Standby power generators were tested under normal load conditions.**

  The facility's generator is tested monthly, for 1 hour.

Security

- **All storage facilities were completely covered and secure.**

  Water storage is provided by the clearwell at the WTP and by a water tower in the distribution system. All facilities are locked at all times when personnel are absent. The water tower is fenced and equipped with a locked gate. 'No Trespassing' signs have been posted at both locations.

- **Air vents and overflows associated with reservoirs and elevated storage structures were equipped with screens.**

  The clearwell is vented to the inside of the WTP via three inverted, J-shaped pipes that extend from the clearwell through the main floor of the plant. Vents to the water tower are equipped with screens.

- **The owner had provided security measures to protect components of the drinking water system.**

  Security measures provided at the WTP include:
  - "No Trespassing" signs;
  - alarm system; and
  - locked doors when employees are not present.

  Security measures provided at the water tower include:
  - "No Trespassing" signs; and

Security

- a fence around the water tower that is gated and locked

There are a limited number of keys available for the WTP and the water tower.

Consumer Relations

- **The owner and/or operating authority undertook efforts to promote water conservation and reduce water losses in their system.**

  During the summer months there is a water conservation program in place for watering lawns.

Certification and Training

- **The overall responsible operator had been designated for each subsystem.**

  The Fort Frances WTP is a Class 3 subsystem and the distribution system is a Class 2 subsystem.
  Two operators operated as the ORO for both the WTP and distribution system during the inspection review period. Both ORO's hold valid water treatment subsystem and distribution system certificates. The ORO for the WTP and distribution system is listed in each logbook daily.

- **Operators-in-charge had been designated for all subsystems which comprised the drinking water system.**

  Only operators with the appropriate level of certification were designated as the OIC for the review period. The OIC's for both the WTP and distribution system are listed in the WTP and distribution logbook daily.

- **All operators possessed the required certification.**

  Only certified operators work at this facility. Appropriately certified operators were designated in the roles of OIC and ORO.

- **Only certified operators made adjustments to the treatment equipment.**

Water Quality Monitoring

- **All microbiological water quality monitoring requirements for raw water samples were being met.**

  O. Reg. 170/03, Schedule 10, Section 10-4, requires that at least one raw water sample be taken every week and tested for total coliform bacteria and E. coli. This requirement was met throughout the inspection review period.

- **All microbiological water quality monitoring requirements for distribution samples were being met.**

  Reg. 170/03, Schedule 10, section 10-2 requires owners and operating authorities of DWS's that serve 100,000 people or fewer to ensure that at least eight distribution samples plus one additional distribution sample for every 1,000 people served by the system are taken each month.
  At least one of the samples must be taken each week. The samples must be tested for E. coli and total coliform bacteria with at least 25% of the required samples to be tested for general bacteria measured using heterotrophic plate counts (HPC).
  The Fort Frances DWS serves a population of approximately 8,000 people; therefore, at least 16 distribution samples must be taken every month. This requirement was met throughout the inspection review period.

- **All microbiological water quality monitoring requirements for treated samples were being met.**

  Section 10-3, O. Reg. 170/03, requires drinking water system owners to ensure that at least one treated water sample is taken every week (from the point of entry to the distribution system) and is tested for total coliform bacteria, E. coli, and HPC bacteria. Samples must be taken at least 5 days and not more than 10 days from when the previous weekly treated water sample was taken.

Water Quality Monitoring

This requirement was met throughout the inspection review period except for on July 6, 2020. On this date, the Chain of Custody demonstrated operators requested that the treated sample be analyzed for HPC bacteria; however, due to lab error, this parameter was not analyzed, on this date. This issue was outside the control of the operator and is not considered an item of non-compliance.

- **All inorganic water quality monitoring requirements prescribed by legislation were conducted within the required frequency.**

  Treated water samples must be taken at least once every 12 months (+/- 30 days from the anniversary of the previous sampling date) and tested for the inorganic parameters listed in O. Reg. 170/03, Schedule 23. These parameters were last sampled for on March 18, 2020, and had been previously sampled on March 12, 2019.

- **All organic water quality monitoring requirements prescribed by legislation were conducted within the required frequency.**

  Treated water samples must be taken at least once every 12 months, +/- 30 days from the anniversary of the previous sampling date and tested for organic parameters listed in O. Reg. 170/03, Schedule 24. These parameters were last sampled for on March 18, 2020, and had been previously sampled on March 12, 2019.

- **All haloacetic acid water quality monitoring requirements prescribed by legislation are being conducted within the required frequency and at the required location.**

  In accordance with section 13-6.1, Schedule 13, O. Reg. 170/03, a sample from the distribution system or plumbing is required to be taken and tested for Haloacetic acid (i.e. HAAs) once in each calendar quarter, from a location that is likely to have an elevated potential for the formation of HAA's. During the inspection review period, HAA samples were collected from the water tower in each calendar quarter. The running annual average (RAA) at the time of the inspection was 70.3 ug/L, the maximum acceptable concentration is 80 ug/L.

- **All trihalomethane water quality monitoring requirements prescribed by legislation were conducted within the required frequency and at the required location.**

  In accordance with section 13-6, Schedule 13, O. Reg. 170/03, a sample from the distribution system or plumbing is required to be taken and tested for Trihalomethanes (i.e. HAAs) once in each calendar quarter, from a location that is likely to have an elevated potential for the formation of THM's.
  During the inspection review period, THM samples were collected from the water tower, in each calendar quarter. The running annual average THM concentration at the time of the inspection was 92 ug/L, the maximum acceptable concentration is 100 ug/L.

- **All nitrate/nitrite water quality monitoring requirements prescribed by legislation were conducted within the required frequency for the DWS.**

  Treated water samples must be taken every three months for analysis of nitrate and nitrite, in accordance with O. Reg. 170/03, Schedule 13, section 13-7.
  During the inspection review period, samples were collected in each calendar quarter. All nitrate and nitrite samples were collected from the WTP at the point of entry to the distribution system. All samples met the requirements listed above.

- **All sodium water quality monitoring requirements prescribed by legislation were conducted within the required frequency.**

  Sodium samples must be collected from the WTP at the point of entry to the distribution system at least once every 60 months to meet the requirements of O. Reg. 170/03, Schedule 13, section 13-8. A sodium sample was last collected from the Fort Frances WTP on March 18, 2020 and the result was 18.2 mg/L. It had been previously sampled on March 9, 2015.

- **The required daily samples were being taken at the end of the fluoridation process.**

Water Quality Monitoring

Schedule 7, section 7-4 of O. Reg. 170/03 requires that if a drinking water system provides fluoridation, the owner of the system and the operating authority for the system shall ensure that a water sample is taken at the end of the fluoridation process at least once every day and is tested for fluoride. Fluoride residuals were being recorded daily by operators. Fluoride is monitored by a continuous analyzer at the same location as the treated water chlorine analyzer, after treatment, prior to water leaving the plant.
During the review period, the highest fluoride residual observed from the daily recording of fluoride residual was 0.79 mg/L. The limit for fluoride is 1.5 mg/L.

- **The owner ensured that water samples were taken at the prescribed location.**

- **All water quality monitoring requirements imposed by the MDWL or DWWP issued under Part V of the SDWA were being met.**

  Suspended solids are required to be monitored quarterly at the point of discharge to the Rainy River. Records indicate that manual composite samples were collected quarterly during the inspection review period and were tested for suspended solids.

- **All sampling requirements for lead prescribed by schedule 15.1 of O. Reg. 170/03 were being met.**

  O. Reg. 170/03, Schedule 15.1 outlines the drinking water system's lead sampling requirements. After completing two consecutive rounds of reduced lead sampling in 2019, the Town of Fort Frances qualified for the exemption from having to take lead samples from plumbing. This means that the Town of Fort Frances is required to test for pH and alkalinity in each of the sampling periods, from 4 distribution locations. In every third year, a lead sample must also be taken in conjunction with the pH and alkalinity tests from 4 distribution locations.
  In 2020, the Town of Fort Frances obtained pandemic relief from lead sampling. The relief allowed for lead sampling to not take place during the December 15, 2019 to April 15, 2020 sampling period and only required that lead sampling take place at 4 non-residential and 4 distribution locations during the June 15, 2020 to October 15, 2020 sampling period. All lead sampling requirements were met during the review period; however, sampling relief provided by the regulation did not require lead sampling to take during the 2020 sampling period, it only required pH and alkalinity to be taken from 4 distribution locations.

- **Records confirmed that chlorine residual tests were being conducted at the same time and at the same location that microbiological samples were obtained.**

- **The owner indicated that the required records are kept and will be kept for the required time period.**

Water Quality Assessment

- **Records did not show that all water sample results taken during the inspection review period did not exceed the values of tables 1, 2 and 3 of the Ontario Drinking Water Quality Standards (O.Reg. 169/03).**

  During the review period there were a number of samples taken from the distribution system that showed the presence of total coliforms. The adverse samples were taken on the following dates:
  - June 17, 2020
  - August 12, 2020
  - August 16, 2020 (resample due to August 12, 2020 sample)
  - December 9, 2020

Reporting & Corrective Actions

- **Corrective actions (as per Schedule 17) had been taken to address adverse conditions, including any other steps that were directed by the Medical Officer of Health.**

Reporting & Corrective Actions

- **All required notifications of adverse water quality incidents were immediately provided as per O. Reg. 170/03 16-6.**

  During the review period, an AWQI was received on September 12, 2020, for the presence of total coliforms. On this date, the 2A form did not indicate when the verbal notifications to the ministry's Spills Action Centre or the local medical officer of health were made; however, the ministry's database captured that a verbal notification was made to the ministry at 15:49, on September 12, 2020 and the municipality provided a record demonstrating the local health unit was contacted at 15:51.

- **All required written notices of adverse water quality incidents were not provided as per O. Reg. 170/03 16-7.**

  O. Reg. 170/03, Schedule 16, section 16-7 requires that 24 hours after providing an immediate verbal notification of an adverse drinking water test result, a written notification of the adverse must be sent to the ministry's Spills Action Centre and the medical officer of health. On September 12, 2020, a verbal notification was made to the Ministry's Spills Action Centre at 15:49, for an adverse test result showing the presence of total coliforms. The written notification for this adverse was not sent out until September 14, 2020, greater than 24 hours after the verbal notifications were made. In addition, the form was completed incorrectly. The form is supposed to capture the date and time the municipality makes a verbal notification to the ministry's Spills Action Centre and medical officer health and specifically who received the verbal notification. During this event, the form captured the date and time the lab made these notifications, not when the municipality made these notifications.

- **In instances where written notice of issue resolution was required by regulation, the notice was provided as per O. Reg. 170/03 16-9.**

- **All reporting requirements for lead sampling were not complied with as per schedule 15.1-9 of O. Reg. 170/03.**

  O. Reg. 170/03, Schedule 15.1, section 15.1-9(1) requires that within 7 days of receiving lead plumbing sample results, a report containing the following, shall be give to the owner:
  - a copy of the report
  - a statement whether the report indicates a result that exceeds any Schedule 2 standard
  - a telephone number of a person who is available to answer questions about the report.

  During the review period, lead samples were taken from 4 businesses in the fall of 2020. A copy of the lead sample results were not provided to the businesses within 7 days of receiving the lead sample results. None of the samples resulted in a lead exceedance.

- **Where required continuous monitoring equipment used for the monitoring of chlorine residual and/or turbidity triggered an alarm or an automatic shut-off, a qualified person responded in a timely manner and took appropriate actions.**

- **The Annual Report did not contain the required information and/or was not prepared by February 28th of the following year.**

  O. Reg. 170/03, section 11(6)(b) and (d) detail that the Annual Report is to include a summary of any reportable events made to the ministry (i.e. adverse test results or observation of improper disinfection), as required by the regulation and describe any corrective actions taken under Schedule 17.
  Although the Annual Report included the number of microbiological distribution samples taken, it failed to capture that a February 25, 2019, distribution sample resulted in an adverse (presence of total coliforms) that was reported to the Spills Action Centre and corrective action was taken to address this issue.

- **Summary Reports for municipal council were completed on time, included the required content, and were distributed in accordance with the regulatory requirements.**

  The 2019 Summary Report contained the required information and was submitted to council on March 10, 2020.

Reporting & Corrective Actions

- **All changes to the system registration information were provided within ten (10) days of the change.**

NON-COMPLIANCE WITH REGULATORY REQUIREMENTS AND ACTIONS REQUIRED

This section provides a summary of all non-compliance with regulatory requirements identified during the inspection period, as well as actions required to address these issues. Further details pertaining to these items can be found in the body of the inspection report.

1. **Continuous monitoring equipment that was being utilized to fulfill O. Reg. 170/03 requirements was not performing tests for the parameters with at least the minimum frequency specified in the Table in Schedule 6 of O. Reg. 170/03 and/or was not recording data with the prescribed format.**

   Final effluent chlorine residuals and filter effluent turbidity from of each filter, are read and recorded in the SCADA system every 60 seconds. Final effluent chlorine residuals are also documented on a chart recorder.
   Daily, the SCADA system prints out a summary of all the filter effluent turbidity data. Based on the data collected, every 15 minutes, the mean, maximum and average values of the previous 15 minutes of data are recorded.
   During the inspection, it was confirmed that the minimum testing and recording frequency was met for the inspection review period, except from 20:12, on March 4, 2020 to 07:50, on March 5, 2020. During this time, data was lost due to a failure of the facility's UPS. Upon further evaluation, it was discovered both the main and back up computer failed because they were on the same power circuit. Once aware of the issue, operators immediately hooked up to an external power source and regained operation of their computer system and ability to continuously record data. Treated water chlorine residual data was also unavailable on the SCADA system for this time period, but the data was available on the chart record.

   Action(s) Required:

   Since the UPS failure, an electrician has installed 2 new UPS units for the main and backup computer and put the plant's controllers on separate power circuits, so that if one system fails, the other should continue to operate.
   No further action is required at this time, to address this issue.

2. **All required written notices of adverse water quality incidents were not provided as per O. Reg. 170/03 16-7.**

   O. Reg. 170/03, Schedule 16, section 16-7 requires that 24 hours after providing an immediate verbal notification of an adverse drinking water test result, a written notification of the adverse must be sent to the Ministry's Spills Action Centre and the medical officer of health. On September 12, 2020, a verbal notification was made to the Ministry's Spills Action Centre at 14:46 and a public health inspector at 15: 39, for an adverse test result showing the presence of total coliforms. The written notification for this adverse was not sent out until September 14, 2020, greater than 24 hours after the verbal notifications were made.

   Action(s) Required:

   Since this incident, the local water inspector has communicated with operators the need to provide a written notification of a reportable event within 24 hours of making the verbal notification. A subsequent reportable incident demonstrated that the written notification was submitted within the required timeframe.
   The Town of Fort Frances shall ensure that all future written notifications of reportable events as detailed under Schedule 16 of O. Reg. 170/03 are submitted within 24 hours of making the verbal notification.

3. **All reporting requirements for lead sampling were not complied with as per schedule 15.1-9 of O. Reg. 170/03.**

   O. Reg. 170/03, Schedule 15.1, section 15.1-9(1) requires that within 7 days of receiving lead plumbing sample results, a report containing the following, shall be give to the owner:
   - a copy of the report
   - a statement whether the report indicates a result that exceeds any Schedule 2 standard
   - a telephone number of a person who is available to answer questions about the report.

   During the review period, lead samples were taken from 4 businesses in the fall of 2020. A copy of the lead sample results were not provided to the businesses within 7 days of receiving the lead sample results. None of the samples resulted in a lead exceedance.

Action(s) Required:

On February 11, 2021, the lead sample results were hand delivered to the 4 businesses whose water was sampled for lead in the fall of 2020. Delivery of the sample results has resolved this item of non-compliance. No further action is required at this time.

4. The Annual Report did not contain the required information and/or was not prepared by February 28th of the following year.

O. Reg. 170/03, section 11(6)(b) and (d) detail that the Annual Report is to include a summary of any reportable events made to the ministry (i.e. adverse test results or observation of improper disinfection), as required by the regulation and describe any corrective actions taken under Schedule 17.
Although the Annual Report included the number of microbiological distribution samples taken, it failed to capture that a February 25, 2019, distribution sample resulted in an adverse (presence of total coliforms) that was reported to the Spills Action Centre and corrective action was taken to address this issue.

Action(s) Required:

By March 26, 2021, the 2019 Annual Report is to be updated to include the February 25, 2019 adverse sample and summarize of corrective actions taken to address the adverse.
By the same date, a copy of the updated 2019 Annual Report is to be submitted to the undersigned officer.

SUMMARY OF RECOMMENDATIONS AND BEST PRACTICE ISSUES

This section provides a summary of all recommendations and best practice issues identified during the inspection period. Details pertaining to these items can be found in the body of the inspection report. In the interest of continuous improvement in the interim, it is recommended that owners and operators develop an awareness of the following issues and consider measures to address them.

1. The owner did not have a harmful algal bloom monitoring plan in place.

The DWS owner does not currently have a Harmful Algal Bloom (HAB) monitoring plan in place.

The ministry has previously issued guidance via a letter asking surface water systems to monitor for algal blooms. Furthermore, renewed Municipal Drinking Water Licence's (MDWL) will include HAB conditions related to monitoring, sampling and reporting. HAB plans must include details relating to: 1.) visual monitoring for HABs at or near the drinking water system intake(s); 2.) details relating to visual monitoring of shoreline for drinking water systems where the proximity of the intake(s) may be of concern; 3.) details relating to reporting and observed or suspected HAB; 4.) a sampling plan, including the identification of sampling location(s) and frequencies and triggers that may increase the sampling frequency, and 5.) up to date records documenting staff training on the HAB monitoring, reporting and sampling procedures.

Recommendation:

In preparation for the new condition to be added to the facility's licence, it is recommended that the facility develop a Harmful Algal Bloom Monitoring Plan. The plan may include, but not be limited to the following:

• Directly observing source water approaching and standing at system intake(s);

• Diligently collecting raw and treated water samples for total microcystin testing at a licensed laboratory;

• Notifying the Ministry, the local Medical Officer of Health (and the local Conservation Authority, if applicable) when a bloom has been observed in order that actions can be taken to protect the public.

SIGNATURES

Inspected By:	Signature: (Provincial Officer)
Carolyn Lacroix	C Lacroix
Reviewed & Approved By:	Signature: (Supervisor)
Paula Spencer	Paula Spencer

Review & Approval Date: February 24, 2021

Note: This inspection does not in any way suggest that there is or has been compliance with applicable legislation and regulations as they apply or may apply to this facility. It is, and remains, the responsibility of the owner and/or operating authority to ensure compliance with all applicable legislative and regulatory requirements.

Key Reference Materials

Key Reference and Guidance Material for Municipal Residential Drinking Water Systems

Many useful materials are available to help you operate your drinking water system. Below is a list of key materials owners and operators of municipal residential drinking water systems frequently use.

To access these materials online click on their titles in the table below or use your web browser to search for their titles. Contact the Public Information Centre if you need assistance or have questions at 1-800-565-4923/416-325-4000 or **picemail.moe@ontario.ca**.

For more information on Ontario's drinking water visit **www.ontario.ca/drinkingwater** and email **drinking.water@ontario.ca** to subscribe to drinking water news.

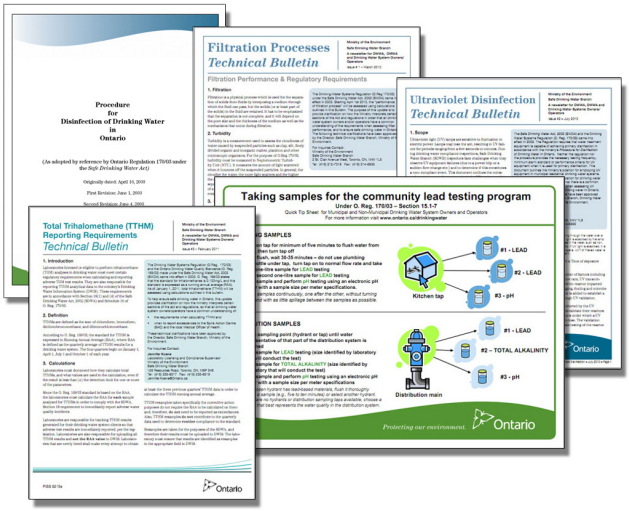

PUBLICATION TITLE	PUBLICATION NUMBER
Taking Care of Your Drinking Water: A Guide for Members of Municipal Councils	7889e01
FORMS: Drinking Water System Profile Information, Laboratory Services Notification, Adverse Test Result Notification Form	7419e, 5387e, 4444e
Procedure for Disinfection of Drinking Water in Ontario	4448e01
Strategies for Minimizing the Disinfection Products Trihalomethanes and Haloacetic Acids	7152e
Total Trihalomethane (TTHM) Reporting Requirements Technical Bulletin (February 2011)	8215e
Filtration Processes Technical Bulletin	7467
Ultraviolet Disinfection Technical Bulletin	7685
Guide for Applying for Drinking Water Works Permit Amendments, Licence Amendments, Licence Renewals and New System Applications	7014e01
Certification Guide for Operators and Water Quality Analysts	
Guide to Drinking Water Operator Training Requirements	9802e
Taking Samples for the Community Lead Testing Program	6560e01
Community Sampling and Testing for Lead: Standard and Reduced Sampling and Eligibility for Exemption	7423e
Guide: Requesting Regulatory Relief from Lead Sampling Requirements	6610
Drinking Water System Contact List	7128e
Technical Support Document for Ontario Drinking Water Quality Standards	4449e01

PIBS 8990b01

Ontario

Principaux guides et documents de référence sur les réseaux résidentiels municipaux d'eau potable

De nombreux documents utiles peuvent vous aider à exploiter votre réseau d'eau potable. Vous trouverez ci-après une liste de documents que les propriétaires et exploitants de réseaux résidentiels municipaux d'eau potable utilisent fréquemment.

Pour accéder à ces documents en ligne, cliquez sur leur titre dans le tableau ci-dessous ou faites une recherche à l'aide de votre navigateur Web. Communiquez avec le Centre d'information au public au 1 800 565-4923 ou au 416 325-4000, ou encore à **picemail.moe@ontario.ca** si vous avez des questions ou besoin d'aide.

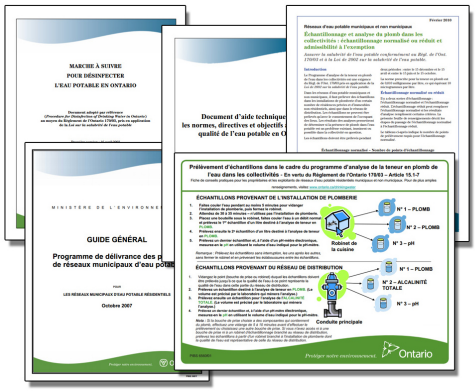

Pour plus de renseignements sur l'eau potable en Ontario, consultez le site **www.ontario.ca/eaupotable** ou envoyez un courriel à **drinking.water@ontario.ca** pour suivre l'information sur l'eau potable.

TITRE DE LA PUBLICATION	NUMÉRO DE PUBLICATION
Prendre soin de votre eau potable – Un guide destiné aux membres des conseils municipaux	7889f01
Renseignements sur le profil du réseau d'eau potable, Avis de demande de services de laboratoire, Formulaire de communication de résultats d'analyse insatisfaisants et du règlement des problèmes	7419f, 5387f, 4444f
Marche à suivre pour désinfecter l'eau potable en Ontario	4448f01
Strategies for Minimizing the Disinfection Products Thrihalomethanes and Haloacetic Acids (en anglais seulement)	7152e
Total Trihalomethane (TTHM) Reporting Requirements: Technical Bulletin (février 2011) (en anglais seulement)	8215e
Filtration Processes Technical Bulletin (en anglais seulement)	7467
Ultraviolet Disinfection Technical Bulletin (en anglais seulement)	7685
Guide de présentation d'une demande de modification du permis d'aménagement de station de production d'eau potable, de modification du permis de réseau municipal d'eau potable, de renouvellement du permis de réseau municipal d'eau potable et de permis pour un nouveau réseau	7014f01
Guide sur l'accréditation des exploitants de réseaux d'eau potable et des analystes de la qualité de l'eau de réseaux d'eau potable	
Guide sur les exigences relatives à la formation des exploitants de réseaux d'eau potable	9802f
Prélèvement d'échantillons dans le cadre du programme d'analyse de la teneur en plomb de l'eau dans les collectivités	6560f01
Échantillonnage et analyse du plomb dans les collectivités : échantillonnage normalisé ou réduit et admissibilité à l'exemption	7423f
Guide: Requesting Regulatory Relief from Lead Sampling Requirements (en anglais seulement)	6610
Liste des personnes-ressources du réseau d'eau potable	7128f
Document d'aide technique pour les normes, directives et objectifs associés à la qualité de l'eau potable en Ontario	4449f01

ontario.ca/eaupotable

PIBS 8990b01

Ontario

Inspection Summary Rating Record

Ministry of the Environment - Inspection Summary Rating Record (Reporting Year - 2020-2021)

DWS Name:	FORT FRANCES DRINKING WATER SYSTEM
DWS Number:	220000978
DWS Owner:	Fort Frances, The Corporation Of The Town Of
Municipal Location:	Fort Frances
Regulation:	O.REG 170/03
Category:	Large Municipal Residential System
Type Of Inspection:	Detailed
Inspection Date:	January 8, 2021
Ministry Office:	Kenora Area Office

Maximum Question Rating: 662

Inspection Module	Non-Compliance Rating
Permit To Take Water	0 / 12
Capacity Assessment	0 / 42
Treatment Processes	0 / 93
Process Wastewater	0 / 20
Distribution System	0 / 8
Operations Manuals	0 / 42
Logbooks	0 / 30
Certification and Training	0 / 42
Water Quality Monitoring	0 / 136
Reporting & Corrective Actions	18 / 96
Treatment Process Monitoring	21 / 141
TOTAL	**39 / 662**

Inspection Risk Rating	**5.89%**

FINAL INSPECTION RATING:	**94.11%**

Inspection Rating Record Generated On 23-FEB-21 (Inspection ID: 1-O99X1).

Ministry of the Environment - Detailed Inspection Rating Record (Reporting Year - 2020-2021)

DWS Name:	FORT FRANCES DRINKING WATER SYSTEM
DWS Number:	220000978
DWS Owner:	Fort Frances, The Corporation Of The Town Of
Municipal Location:	Fort Frances
Regulation:	O.REG 170/03
Category:	Large Municipal Residential System
Type Of Inspection:	Detailed
Inspection Date:	January 8, 2021
Ministry Office:	Kenora Area Office

Non-compliant Question(s)	Question Rating
Reporting & Corrective Actions	
Was an Annual Report containing the required information prepared by February 28 of the following year?	4
Were all required written notices of adverse water quality incidents provided as per O. Reg. 170/03 16-7?	6
Were all reporting requirements for lead sampling complied with as per schedule 15.1-9 of O. Reg. 170/03?	8
Treatment Process Monitoring	
Is continuous monitoring equipment that is being utilized to fulfill O. Reg. 170/03 requirements performing tests for the parameters with at least the minimum frequency specified in the Table in Schedule 6 of O. Reg. 170/03 and recording data with the prescribed format?	21
TOTAL QUESTION RATING	39

Maximum Question Rating: 662

Inspection Risk Rating	**5.89%**

FINAL INSPECTION RATING:	**94.11%**

Inspection Rating Record Generated On 23-FEB-21 (Inspection ID: 1-O99X1).

APPLICATION OF THE RISK METHODOLOGY USED FOR MEASURING MUNICIPAL RESIDENTIAL DRINKING WATER SYSTEM INSPECTION RESULTS

The Ministry of the Environment (MOE) has a rigorous and comprehensive inspection program for municipal residential drinking water systems (MRDWS). Its objective is to determine the compliance of MRDWS with requirements under the Safe Drinking Water Act and associated regulations. It is the responsibility of the municipal residential drinking water system owner to ensure their drinking water systems are in compliance with all applicable legal requirements.

This document describes the risk rating methodology, which has been applied to the findings of the Ministry's MRDWS inspection results since fiscal year 2008-09. The primary goals of this assessment are to encourage ongoing improvement of these systems and to establish a way to measure this progress.

MOE reviews the risk rating methodology every three years to account for legislative and societal changes that affect acceptable risk levels. As a result of the most recent review, the methodology has been modified to present an improved metric for the evaluation of the risk/safety of MRDWS operations.

The Ministry's Municipal Residential Drinking Water Inspection Protocol contains up to 14 inspection modules and consists of approximately 120 regulatory questions. Those protocol questions are also linked to definitive guidance that

PIBS 6797e

ministry inspectors use when conducting MRDWS inspections. The questions address a wide range of regulatory issues, from administrative procedures to drinking water quality monitoring. Additionally, the inspection protocol contains a number of non-regulatory questions.

A team of drinking water specialists in the ministry have assessed each of the inspection protocol regulatory questions to determine the risk (not complying with the regulation) to the delivery of safe drinking water. This assessment was based on established provincial risk assessment principles, with each question receiving a risk rating referred to as the Question Risk Rating. Based on the number of areas where a system is deemed to be non-compliant during the inspection, and the significance of these areas to administrative, environmental, and health consequences, a risk-based inspection rating is calculated by the ministry for each drinking water system.

It is important to be aware that an inspection rating that is less than 100 per cent does not mean that the drinking water from the system is unsafe. It shows areas where a system's operation can improve. To that end, the ministry works with owners and operators of systems to make sure they know what they need to do to achieve full compliance.

The inspection rating reflects the inspection results of the specific drinking water system for the reporting year. Since the methodology is applied consistently over a period of years, it serves as a comparative measure both provincially and in relation to the individual system. Both the drinking water system and the public are able to track the performance over time, which encourages continuous improvement and allows systems to identify specific areas requiring attention.

The ministry's annual inspection program is an important aspect of our drinking water safety net. The ministry and its partners share a common commitment to excellence and we continue to work toward the goal of 100 per cent regulatory compliance.

Determining Potential to Compromise the Delivery of Safe Water

The risk management approach used for MRDWS is aligned with the Government of Ontario's Risk Management Framework. Risk management is a systematic approach to identifying potential hazards; understanding the likelihood and consequences of the hazards; and taking steps to reduce their risk if necessary and as appropriate.

The Risk Management Framework provides a formula to be used in the determination of risk:

RISK = LIKELIHOOD × CONSEQUENCE
(of the consequence)

Every regulatory question in the inspection protocol possesses a likelihood value (L) for an assigned consequence value (C) as described in **Table 1** and **Table 2**.

TABLE 1:

Likelihood of Consequence Occurring	Likelihood Value
0% - 0.99% (Possible but Highly Unlikely)	L = 0
1 – 10% (Unlikely)	L = 1
11 – 49% (Possible)	L = 2
50 – 89% (Likely)	L = 3
90 – 100% (Almost Certain)	L = 4

TABLE 2:

Consequence	Consequence Value
Medium Administrative Consequence	C = 1
Major Administrative Consequence	C = 2
Minor Environmental Consequence	C = 3
Minor Health Consequence	C = 4
Medium Environmental Consequence	C = 5
Major Environmental Consequence	C = 6
Medium Health Consequence	C = 7
Major Health Consequence	C = 8

The consequence values (0 through 8) are selected to align with other risk-based programs and projects currently under development or in use within the ministry as outlined in **Table 2**.

The Question Risk Rating for each regulatory inspection question is derived from an evaluation of every identified consequence and its corresponding likelihood of occurrence:

- All levels of consequence are evaluated for their potential to occur
- Greatest of all the combinations is selected.

The Question Risk Rating quantifies the risk of non-compliance of each question relative to the others. Questions with higher values are those with a potentially more significant impact on drinking water safety and a higher likelihood of occurrence. The highest possible value would be 32 (4×8) and the lowest would be 0 (0×1).

Table 3 presents a sample question showing the risk rating determination process.

TABLE 3:

Does the Operator in Charge ensure that the equipment and processes are monitored, inspected and evaluated?

Risk = Likelihood × Consequence							
C=1	C=2	C=3	C=4	C=5	C=6	C=7	C=8
Medium Administrative Consequence	**Major** Administrative Consequence	**Minor** Environmental Consequence	**Minor** Health Consequence	**Medium** Environmental Consequence	**Major** Environmental Consequence	**Medium** Health Consequence	**Major** Health Consequence
L=4 (Almost Certain)	L=1 (Unlikely	L=2 (Possible)	L=3 (Likely)	L=3 (Likely)	L=1 (Unlikely	L=3 (Likely)	L=2 (Possible)
R=4	**R=2**	**R=6**	**R=12**	**R=15**	**R=6**	**R=21**	**R=16**

Application of the Methodology to Inspection Results

Based on the results of a MRDWS inspection, an overall inspection risk rating is calculated. During an inspection, inspectors answer the questions that relate to regulatory compliance and input their responses as “yes”, “no” or “not applicable” into the Ministry’s Laboratory and Waterworks Inspection System (LWIS) database. A “no” response indicates non-compliance. The maximum number of regulatory questions asked by an inspector varies by: system (i.e., distribution, stand-alone), type of inspection (i.e., focused, detailed), and source type (i.e., groundwater, surface water).

The risk ratings of all non-compliant answers are summed and divided by the sum of the risk ratings of all questions asked (maximum question rating). The resulting inspection risk rating (as a percentage) is subtracted from 100 per cent to arrive at the final inspection rating.

Application of the Methodology for Public Reporting

The individual MRDWS Total Inspection Ratings are published with the ministry's Chief Drinking Water Inspector's Annual Report.

Figure 1 presents the distribution of MRDWS ratings for a sample of annual inspections. Individual drinking water systems can compare against all the other inspected facilities over a period of inspection years.

Figure 1: Year Over Year Distribution of MRDWS Ratings

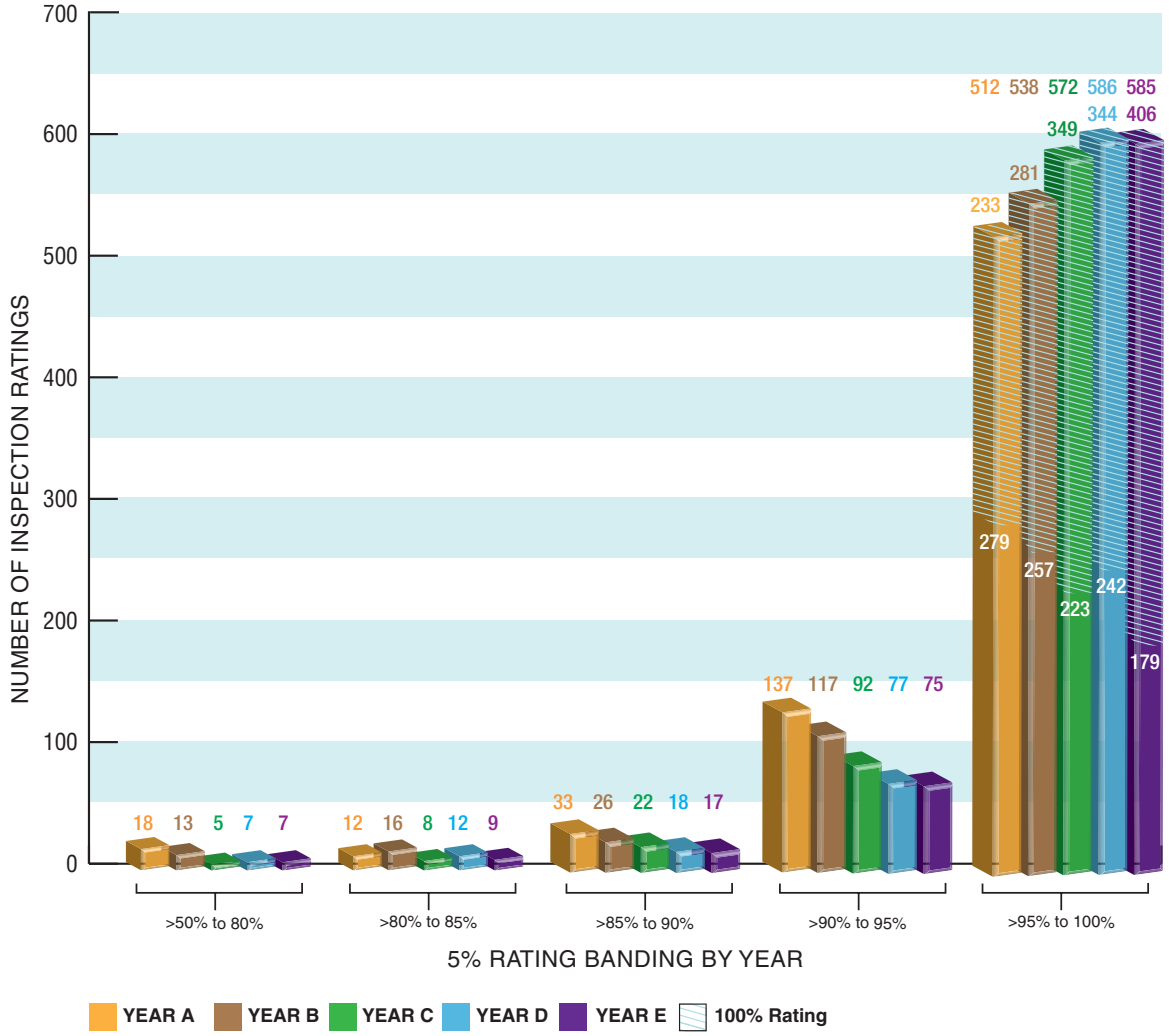

Reporting Results to MRDWS Owners/Operators

A summary of inspection findings for each system is generated in the form of an Inspection Rating Record (IRR). The findings are grouped into the 14 possible modules of the inspection protocol, which would provide the system owner/operator with information on the areas where they need to improve. The 14 modules are:

1. Source
2. Permit to Take Water
3. Capacity Assessment
4. Treatment Processes
5. Process Wastewater
6. Distribution System
7. Operations Manuals
8. Logbooks
9. Contingency and Emergency Planning
10. Consumer Relations
11. Certification and Training
12. Water Quality Monitoring
13. Reporting, Notification and Corrective Actions
14. Other Inspection Findings

For further information, please visit **www.ontario.ca/drinkingwater**

Appendix "F"

DWQMS Certificate of Accreditation

CERTIFICATE OF ACCREDITATION

This is to certify that the following operating authority:

The Corporation of the Town of Fort Frances

320 Portage Avenue**,** Fort Frances, Ontario P9A 2P9 Canada

Refer to Attachment to Certificate of Accreditation dated November 19, 2020 for additional drinking water systems

operates a

Quality Management System

which conforms with the requirements of

DRINKING WATER QUALITY MANAGEMENT STANDARD VERSION 2 - 2017

for the following scope of accreditation

Full Scope - Entire DWQMS

Certificate No.:	CERT-0132926	Original Certification Date:	December 7, 2012
File No.:	1631580	Certification Effective Date:	November 16, 2020
Issue Date:	November 19, 2020	Certification Expiry Date:	February 17, 2022

Heather Mahon
Global Head of Technical Services
SAI Global Assurance

DWQMS 2017

Accredited by:
QMI-SAI Canada Limited (SAI Global), 20 Carlson Court, Suite 200, Toronto, Ontario M9W 7K6 Canada**.** This registration is subject to the **SAI Global** Terms and Conditions for Certification. While all due care and skill was exercised in carrying out this assessment**, SAI Global** accepts responsibility only for proven negligence. This certificate remains the property of **SAI Global** and must be returned to them upon request.
To verify that this certificate is current, please refer to the **SAI Global** On-Line Certification Register:
https://www.saiglobal.com/en-us/assurance/auditing_and_certification/certification_registry/

SAI GLOBAL
INFORM. INSPIRE. IMPROVE.

ATTACHMENT TO

CERTIFICATE OF ACCREDITATION

These sites are accredited under Certificate No: CERT-0132926 issued on November 19, 2020

File No.		Effective Date
1631580	**The Corporation of the Town of Fort Frances** 320 Portage Avenue, Fort Frances, Ontario P9A 2P9 Canada	November 16, 2020

Drinking Water Systems

	Site No.	Site Name
Yes	1633091	Fort Frances Drinking Water System

These accreditations are dependent on The Corporation of the Town of Fort Frances (File No. 1631580) maintaining their scope of registration to DRINKING WATER QUALITY MANAGEMENT STANDARD VERSION 2 - 2017

SAI GLOBAL
INFORM. INSPIRE. IMPROVE.

List of References

Safe Drinking Water Act, 2002 (SDWA)
Ontario Regulation 170/03 of the SDWA (Drinking Water Systems),
Ontario Regulation 128/04 of the SDWA (Certification of Drinking Water System Operators and Water Quality Analysts),
Ontario Regulation 169/03 of the SDWA (Ontario Drinking Water Quality Standards)
Ontario Regulation 188/07 of the SDWA (Licensing of Municipal Drinking Water Systems)